TOKYOCOILENGINEERING

# POWER INDUCTOR CATALOG

パワーインダクタ カタログ

# TCEパワーインダクタ製品スペック一覧

*List of TCE power inductor product specs*

TOKYOCOILENGINEERING POWER INDUCTOR

## SHP SERIES


1. SHP0315P シリーズ — P4
2. SHP0320P シリーズ — P5
3. SHP0415P シリーズ — P6
4. SHP0420P シリーズ — P7
5. SHP0520P シリーズ — P8
6. SHP0530P シリーズ — P9
7. SHP0735P シリーズ — P10
8. SHP0745P シリーズ — P11
9. SHP0760P シリーズ — P12
10. SHP1035P シリーズ — P13
11. SHP1045P シリーズ — P14
12. SHP1055P シリーズ — P15
13. SHP1235P シリーズ — P16
14. SHP1245P シリーズ — P17
15. SHP1260P シリーズ — P18
16. SHP1280P シリーズ — P19
17. 外形寸法図 SHP0315P / 0320P / 0415P / 0420P — P20
18. 外形寸法図 SHP0520P / 0530P — P21
19. 外形寸法図 SHP0735P / 0745P / 0760P — P22
20. 外形寸法図 SHP1035P / 1045P / 1055P — P23
21. 外形寸法図 SHP1235P / 1245P / 1260P / 1280P — P24


## MCP SERIES


22. MCP1610 シリーズ — P25
23. MCP201610 / 252006 シリーズ — P26
24. MCP252008 / 252010 シリーズ — P27
25. MCP252012 シリーズ — P28
26. MCP0306 / 0310 シリーズ — P29
27. MCP0312 シリーズ — P30
28. MCP0315 シリーズ — P31
29. MCP0320 シリーズ — P32
30. MCP0420 / 0430 シリーズ — P33
31. 外形寸法図 MCP1610 / 201610 — P34
32. 外形寸法図 MCP252006 / 252008 / 252010 / 252012 / 0306 / 0310 / 0312 / 0315 / 0320 — P35
33. 外形寸法図 MCP0420 / 0430 — P36


## Reel Packaging Spesification


34. リールパッケージ仕様 — P38

# TCEパワーインダクタ製品 サイズ別一覧表

*List of TCE power inductor product size*

## SHP SERIES

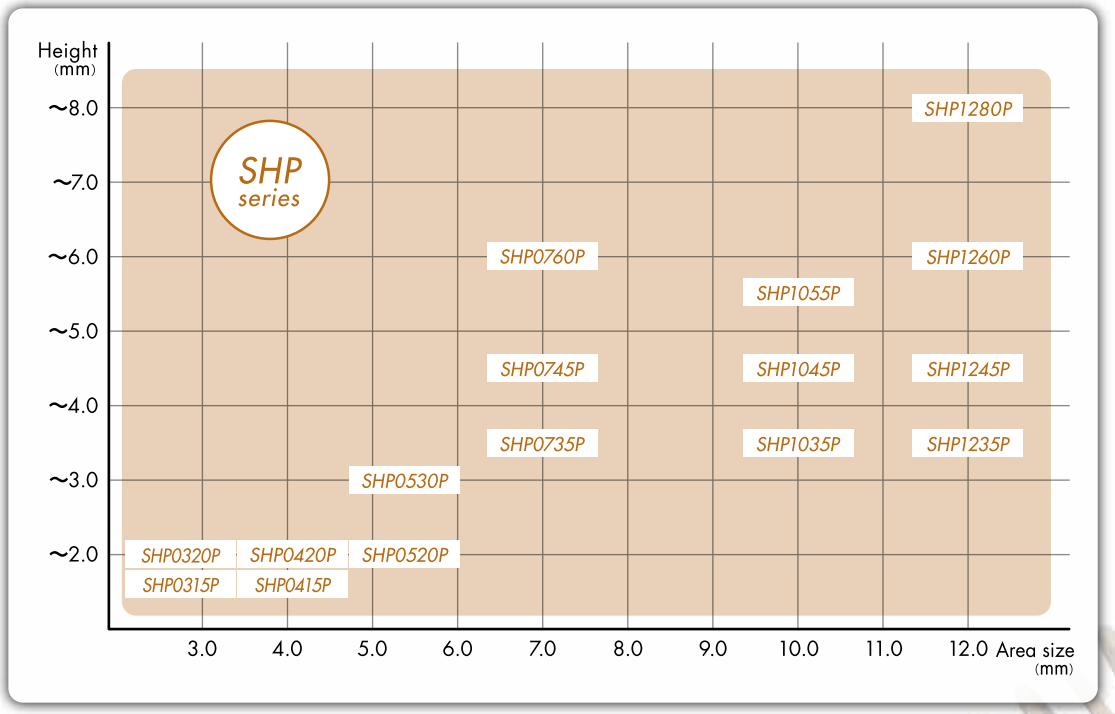


*Shield Type Ni-Zn Ferrite Choke Coils (Pot core structure)*

**閉磁路Ni-Zn系フェライトチョークコイル（ポットコア構造）**

## MCP SERIES

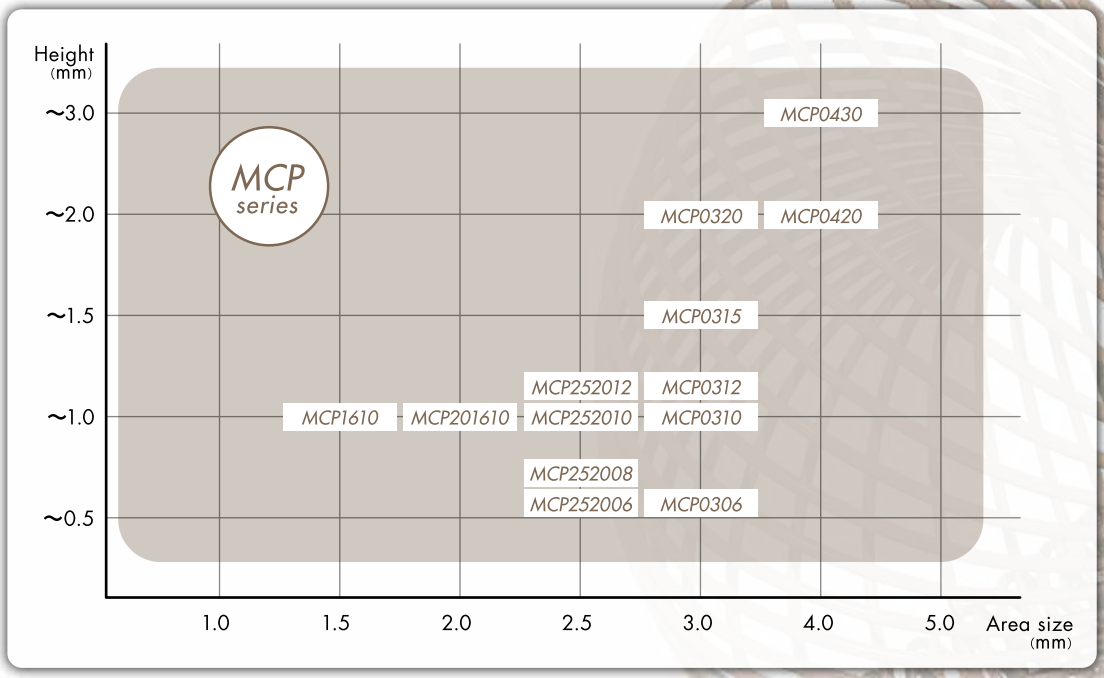


*Metal Composite type Power inductor*

**金属磁性粉末コンポジットパワーインダクタ**

# TCEパワーインダクタ製品①
# SHPシリーズ

*The TCE power inductor product ① / SHP series*

## FEATURES / 特徴

Low leakage flux to the outside by complete closed magnetic circuit structure
/ 完全閉磁路構造による外部への漏れ磁束が少ない
Correspond to large saturation current by high Bm Ni-Zn ferrite core
/ 高B材Ni-Zn系フェライトコアによる高飽和電流対応

## PRODUCT NUMBER / 品番例

SHP 0520 P - F 3R3 A
① ② ③ ④ ⑤ ⑥

① Series Code : SHIELD HIGH-POWER INDUCTOR
② Dimensions : (ex) 5.0×5.0×2.0mm
③ Type : Closed magnetic circuit : Pot core
④ Pb free
⑤ Inductance : (ex) 3.3uH
⑥ Material indication

① シリーズ名：シールド・ハイパワー・インダクタ
② 寸法：(例)5.0×5.0×2.0mm
③ タイプ：閉磁路タイプ：ポットコア
④ 鉛フリー
⑤ インダクタンス(例)3.3uH
⑥ 材質表示

## SHP0315P SERIES

| Part No. | Inductance *1 | Tolerance | TYP. DCR | Max. DCR | DC Superimposition current *2 | Temperature rise current *3 |
|---|---|---|---|---|---|---|
| 部品番号 | インダクタンス (uH) | 許容差 | 直流抵抗 (mΩ) | 最大直流抵抗 (mΩ) | 直流重畳許容電流 (A) | 温度上昇許容電流 (A) |
| SHP0315P-F1R0NAP | 1.0 | ±30% | 76 | 92 | 2.24 | 1.71 |
| SHP0315P-F1R6NAP | 1.6 | ±30% | 108 | 130 | 1.80 | 1.42 |
| SHP0315P-F2R2NAP | 2.2 | ±30% | 131 | 157 | 1.56 | 1.30 |
| SHP0315P-F3R3NAP | 3.3 | ±30% | 219 | 263 | 1.29 | 1.00 |
| SHP0315P-F4R7NAP | 4.7 | ±30% | 271 | 325 | 1.07 | 0.90 |
| SHP0315P-F6R8NAP | 6.8 | ±30% | 491 | 589 | 0.89 | 0.65 |
| SHP0315P-F8R2NAP | 8.2 | ±30% | 548 | 658 | 0.81 | 0.62 |
| SHP0315P-F100NAP | 10 | ±30% | 608 | 730 | 0.73 | 0.59 |
| SHP0315P-F150NAP | 15 | ±30% | 1,017 | 1,220 | 0.59 | 0.45 |
| SHP0315P-F180NAP | 18 | ±30% | 1,142 | 1,370 | 0.54 | 0.43 |
| SHP0315P-F220NAP | 22 | ±30% | 1,268 | 1,522 | 0.49 | 0.40 |
| SHP0315P-F330NAP | 33 | ±30% | 2,157 | 2,588 | 0.40 | 0.31 |

*1：Inductance is mesured at 100kHz. / インダクタンス測定、100kHz.
*2：DC_current based upon 30% inductance reduction from the initial value.
/ インダクタンスが初期値より-30%になる電流値
*3：DC_current based upon 40℃ temperature rise. / 温度上昇ΔT＝40℃max.になる電流値
*4：Coil operation temperature is –40℃～125℃( includes temperature when the coil is heated )
/ コイルの使用温度範囲は-40℃～125℃(コイルの発熱含む)

# SHP0320P SERIES

| Part No. | Inductance *1 | Tolerance | TYP. DCR | Max. DCR | DC Superimposition current *2 | Temperature rise current *3 |
|---|---|---|---|---|---|---|
| 部品番号 | インダクタンス (uH) | 許容差 | 直流抵抗 (mΩ) | 最大直流抵抗 (mΩ) | 直流重畳許容電流 (A) | 温度上昇許容電流 (A) |
| SHP0320P-F1R0NAP | 1.0 | ±30% | 39 | 62 | 2.43 | 2.48 |
| SHP0320P-F1R6NAP | 1.6 | ±30% | 59 | 72 | 1.92 | 1.97 |
| SHP0320P-F2R2NAP | 2.2 | ±30% | 78 | 97 | 1.56 | 1.73 |
| SHP0320P-F3R3NAP | 3.3 | ±30% | 121 | 151 | 1.29 | 1.40 |
| SHP0320P-F4R7NAP | 4.7 | ±30% | 153 | 187 | 1.10 | 1.24 |
| SHP0320P-F6R8NAP | 6.8 | ±30% | 245 | 306 | 0.89 | 1.00 |
| SHP0320P-F8R2NAP | 8.2 | ±30% | 283 | 349 | 0.82 | 0.93 |
| SHP0320P-F100NAP | 10 | ±30% | 302 | 378 | 0.74 | 0.86 |
| SHP0320P-F150NAP | 15 | ±30% | 472 | 582 | 0.62 | 0.67 |
| SHP0320P-F180NAP | 18 | ±30% | 635 | 713 | 0.55 | 0.59 |
| SHP0320P-F220NAP | 22 | ±30% | 700 | 858 | 0.50 | 0.56 |
| SHP0320P-F330NAP | 33 | ±30% | 1,121 | 1,351 | 0.40 | 0.45 |
| SHP0320P-F470NAP | 47 | ±30% | 1,787 | 2,580 | 0.33 | 0.36 |

*1:Inductance is mesured at 100kHz. / インダクタンス測定、100kHz.
*2:DC_current based upon 30% inductance reduction from the initial value.
/ インダクタンスが初期値より-30%になる電流値
*3:DC_current based upon 40℃ temperature rise. / 温度上昇ΔT=40℃max.になる電流値
*4:Coil operation temperature is –40℃～125℃( includes temperature when the coil is heated )
/ コイルの使用温度範囲は-40℃～125℃(コイルの発熱含む)

# SHP0415P SERIES

| Part No. | Inductance *1 | Tolerance | TYP. DCR | Max. DCR | DC Superimposition current *2 | Temperature rise current *3 |
|---|---|---|---|---|---|---|
| 部品番号 | インダクタンス (uH) | 許容差 | 直流抵抗 (mΩ) | 最大直流抵抗 (mΩ) | 直流重畳許容電流 (A) | 温度上昇許容電流 (A) |
| SHP0415P-F1R0NAP | 1.0 | ±30% | 41 | 49 | 3.04 | 2.77 |
| SHP0415P-F1R6NAP | 1.6 | ±30% | 69 | 83 | 2.42 | 2.13 |
| SHP0415P-F2R2NAP | 2.2 | ±30% | 87 | 104 | 2.06 | 1.90 |
| SHP0415P-F3R3NAP | 3.3 | ±30% | 145 | 174 | 1.66 | 1.47 |
| SHP0415P-F4R7NAP | 4.7 | ±30% | 180 | 216 | 1.43 | 1.30 |
| SHP0415P-F6R8NAP | 6.8 | ±30% | 249 | 299 | 1.18 | 1.13 |
| SHP0415P-F8R2NAP | 8.2 | ±30% | 289 | 347 | 1.06 | 1.03 |
| SHP0415P-F100NAP | 10 | ±30% | 407 | 488 | 1.03 | 0.86 |
| SHP0415P-F150NAP | 15 | ±30% | 498 | 599 | 0.83 | 0.79 |
| SHP0415P-F180NAP | 18 | ±30% | 618 | 742 | 0.71 | 0.70 |
| SHP0415P-F220NAP | 22 | ±30% | 708 | 850 | 0.65 | 0.66 |
| SHP0415P-F330NAP | 33 | ±30% | 1,130 | 1,356 | 0.54 | 0.52 |
| SHP0415P-F470NAP | 47 | ±30% | 1,371 | 1,645 | 0.45 | 0.47 |

*1:Inductance is mesured at 100kHz. / インダクタンス測定、100kHz.
*2:DC_current based upon 30% inductance reduction from the initial value.
/ インダクタンスが初期値より-30%になる電流値
*3:DC_current based upon 40℃ temperature rise. / 温度上昇ΔT=40℃max.になる電流値
*4:Coil operation temperature is −40℃～125℃( includes temperature when the coil is heated )
/ コイルの使用温度範囲は-40℃～125℃(コイルの発熱含む)

# SHP0420P SERIES

| Part No. | Inductance *1 | Tolerance | TYP. DCR | Max. DCR | DC Superimposition current *2 | Temperature rise current *3 |
|---|---|---|---|---|---|---|
| 部品番号 | インダクタンス (uH) | 許容差 | 直流抵抗 (mΩ) | 最大直流抵抗 (mΩ) | 直流重畳許容電流 (A) | 温度上昇許容電流 (A) |
| SHP0420P-F1R0NAP | 1.0 | ±30% | 32 | 38 | 3.80 | 2.93 |
| SHP0420P-F1R6NAP | 1.6 | ±30% | 38 | 45 | 3.30 | 2.48 |
| SHP0420P-F2R2NAP | 2.2 | ±30% | 54 | 65 | 2.60 | 2.23 |
| SHP0420P-F3R3NAP | 3.3 | ±30% | 76 | 92 | 2.20 | 1.85 |
| SHP0420P-F4R7NAP | 4.7 | ±30% | 90 | 108 | 1.90 | 1.63 |
| SHP0420P-F6R8NAP | 6.8 | ±30% | 148 | 178 | 1.45 | 1.28 |
| SHP0420P-F8R2NAP | 8.2 | ±30% | 173 | 207 | 1.35 | 1.21 |
| SHP0420P-F100NAP | 10 | ±30% | 237 | 312 | 1.25 | 1.00 |
| SHP0420P-F150NAP | 15 | ±30% | 381 | 450 | 1.00 | 0.80 |
| SHP0420P-F220NAP | 22 | ±30% | 473 | 625 | 0.85 | 0.73 |
| SHP0420P-F330NAP | 33 | ±30% | 720 | 851 | 0.70 | 0.59 |
| SHP0420P-F470NAP | 47 | ±30% | 880 | 1,040 | 0.60 | 0.54 |

*1:Inductance is mesured at 100kHz. / インダクタンス測定、100kHz.
*2:DC_current based upon 30% inductance reduction from the initial value.
/ インダクタンスが初期値より-30%になる電流値
*3:DC_current based upon 40℃ temperature rise. / 温度上昇ΔT=40℃max.になる電流値
*4:Coil operation temperature is –40℃～125℃( includes temperature when the coil is heated )
/ コイルの使用温度範囲は-40℃～125℃(コイルの発熱含む)

# SHP0520P SERIES

| Part No. | Inductance *1 | Tolerance | TYP. DCR | Max. DCR | DC Superimposition current *2 | Temperature rise current *3 |
|---|---|---|---|---|---|---|
| 部品番号 | インダクタンス (uH) | 許容差 | 直流抵抗 (mΩ) | 最大直流抵抗 (mΩ) | 直流重畳許容電流 (A) | 温度上昇許容電流 (A) |
| SHP0520P-F3R3AP | 3.3 | ±30% | 69 | 83 | 2.70 | 1.65 |
| SHP0520P-F4R7AP | 4.7 | ±30% | 87 | 101 | 2.40 | 1.42 |
| SHP0520P-F5R6AP | 5.6 | ±30% | 93 | 104 | 2.20 | 1.33 |
| SHP0520P-F6R8AP | 6.8 | ±30% | 116 | 135 | 2.10 | 1.29 |
| SHP0520P-F8R2AP | 8.2 | ±30% | 123 | 147 | 1.80 | 1.19 |
| SHP0520P-F100A | 10 | ±20% | 173 | 207 | 1.50 | 1.05 |
| SHP0520P-F120A | 12 | ±20% | 215 | 258 | 1.40 | 0.92 |
| SHP0520P-F150A | 15 | ±20% | 265 | 318 | 1.20 | 0.87 |
| SHP0520P-F180A | 18 | ±20% | 298 | 357 | 1.00 | 0.80 |
| SHP0520P-F220A | 22 | ±20% | 447 | 536 | 1.00 | 0.62 |
| SHP0520P-F330A | 33 | ±20% | 567 | 680 | 0.80 | 0.57 |
| SHP0520P-F470A | 47 | ±20% | 792 | 950 | 0.60 | 0.49 |
| SHP0520P-F560A | 56 | ±20% | 881 | 1,057 | 0.60 | 0.46 |
| SHP0520P-F101A | 100 | ±20% | 2,383 | 2,860 | 0.40 | 0.27 |
| SHP0520P-F151A | 150 | ±20% | 3,083 | 3,700 | 0.30 | 0.25 |
| SHP0520P-F221A | 220 | ±20% | 3,967 | 4,760 | 0.20 | 0.20 |
| SHP0520P-F331A | 330 | ±20% | 6,617 | 7,940 | 0.16 | 0.17 |
| SHP0520P-F471A | 470 | ±20% | 9,950 | 11,460 | 0.14 | 0.14 |

*1:Inductance is mesured at 100kHz. / インダクタンス測定、100kHz.
*2:DC_current based upon 30% inductance reduction from the initial value.
/ インダクタンスが初期値より-30%になる電流値
*3:DC_current based upon 35℃ temperature rise. / 温度上昇ΔT＝35℃max.になる電流値
*4:Coil operation temperature is –25℃～120℃ / A type , -40℃～125℃ / AP type( includes temperature when the coil is heated )
/ コイルの使用温度範囲は-25℃～120℃ / A type , -40℃～125℃ / AP type(コイルの発熱含む)

# SHP0530P SERIES

| Part No. | Inductance *1 | Tolerance | TYP. DCR | Max. DCR | DC Superimposition current *2 | Temperature rise current *3 |
|---|---|---|---|---|---|---|
| 部品番号 | インダクタンス (uH) | 許容差 | 直流抵抗 (mΩ) | 最大直流抵抗 (mΩ) | 直流重畳許容電流 (A) | 温度上昇許容電流 (A) |
| SHP0530P-F1R0AP | 1.0 | ±30% | 22 | 26 | 3.54 | 2.86 |
| SHP0530P-F1R5AP | 1.5 | ±30% | 23 | 28 | 2.90 | 2.78 |
| SHP0530P-F2R2AP | 2.2 | ±30% | 33 | 41 | 2.45 | 2.50 |
| SHP0530P-F3R3AP | 3.3 | ±30% | 36 | 45 | 2.20 | 2.40 |
| SHP0530P-F4R7AP | 4.7 | ±30% | 41 | 50 | 1.68 | 2.19 |
| SHP0530P-F5R6AP | 5.6 | ±30% | 50 | 62 | 1.52 | 2.06 |
| SHP0530P-F6R8AP | 6.8 | ±30% | 59 | 72 | 1.39 | 1.91 |
| SHP0530P-F8R2AP | 8.2 | ±30% | 64 | 78 | 1.28 | 1.84 |
| SHP0530P-F100AP | 10 | ±30% | 66 | 81 | 1.10 | 1.82 |
| SHP0530P-F120AP | 12 | ±30% | 91 | 111 | 1.03 | 1.54 |
| SHP0530P-F150AP | 15 | ±30% | 128 | 157 | 0.91 | 1.29 |
| SHP0530P-F180AP | 18 | ±30% | 143 | 176 | 0.86 | 1.22 |
| SHP0530P-F220AP | 22 | ±30% | 153 | 188 | 0.78 | 1.14 |
| SHP0530P-F270AP | 27 | ±30% | 176 | 216 | 0.68 | 1.07 |
| SHP0530P-F330AP | 33 | ±30% | 237 | 291 | 0.60 | 0.89 |
| SHP0530P-F390AP | 39 | ±30% | 255 | 313 | 0.56 | 0.86 |
| SHP0530P-F470AP | 47 | ±30% | 323 | 396 | 0.50 | 0.79 |
| SHP0530P-F560AP | 56 | ±30% | 365 | 448 | 0.48 | 0.74 |
| SHP0530P-F680AP | 68 | ±30% | 461 | 565 | 0.40 | 0.64 |
| SHP0530P-F820AP | 82 | ±30% | 552 | 677 | 0.39 | 0.58 |
| SHP0530P-F101AP | 100 | ±20% | 748 | 918 | 0.35 | 0.56 |
| SHP0530P-F121AP | 120 | ±20% | 1,000 | 1,300 | 0.30 | 0.50 |
| SHP0530P-F151AP | 150 | ±20% | 1,081 | 1,326 | 0.29 | 0.43 |
| SHP0530P-F181AP | 180 | ±20% | 1,361 | 1,671 | 0.26 | 0.35 |
| SHP0530P-F221AP | 220 | ±20% | 1,513 | 1,856 | 0.20 | 0.33 |

*1：Inductance is mesured at 100kHz. / インダクタンス測定、100kHz.
*2：DC_current based upon 30% inductance reduction from the initial value.
/ インダクタンスが初期値より-30%になる電流値
*3：DC_current based upon 35℃ temperature rise. / 温度上昇ΔT=35℃max.になる電流値
*4：Coil operation temperature is –40℃～125℃( includes temperature when the coil is heated )
/ コイルの使用温度範囲は-40℃～125℃(コイルの発熱含む)

# SHP0735P SERIES

| Part No. | Inductance *1 | Tolerance | TYP. DCR | Max. DCR | DC Superimposition current *2 | Temperature rise current *3 |
|---|---|---|---|---|---|---|
| 部品番号 | インダクタンス (uH) | 許容差 | 直流抵抗 (mΩ) | 最大直流抵抗 (mΩ) | 直流重畳許容電流 (A) | 温度上昇許容電流 (A) |
| SHP0735P-F3R3AP | 3.3 | ±30% | 23 | 27 | 6.70 | 4.70 |
| SHP0735P-F4R7AP | 4.7 | ±30% | 32 | 39 | 6.00 | 3.50 |
| SHP0735P-F5R6AP | 5.6 | ±30% | 38 | 46 | 5.10 | 3.30 |
| SHP0735P-F6R8AP | 6.8 | ±30% | 45 | 58 | 4.40 | 3.20 |
| SHP0735P-F8R2AP | 8.2 | ±30% | 57 | 71 | 4.10 | 2.70 |
| SHP0735P-F100A | 10 | ±20% | 76 | 84 | 3.80 | 2.60 |
| SHP0735P-F120A | 12 | ±20% | 81 | 91 | 3.60 | 2.20 |
| SHP0735P-F150A | 15 | ±20% | 83 | 100 | 3.30 | 2.10 |
| SHP0735P-F180A | 18 | ±20% | 103 | 120 | 2.80 | 1.90 |
| SHP0735P-F220A | 22 | ±20% | 125 | 153 | 2.40 | 1.70 |
| SHP0735P-F330A | 33 | ±20% | 176 | 194 | 2.20 | 1.60 |
| SHP0735P-F470A | 47 | ±20% | 238 | 266 | 1.80 | 1.10 |
| SHP0735P-F560A | 56 | ±20% | 342 | 391 | 1.60 | 1.00 |
| SHP0735P-F680A | 68 | ±20% | 394 | 434 | 1.40 | 0.90 |
| SHP0735P-F820A | 82 | ±20% | 530 | 590 | 1.30 | 0.80 |
| SHP0735P-F101A | 100 | ±20% | 613 | 782 | 1.20 | 0.70 |
| SHP0735P-F121A | 120 | ±20% | 739 | 972 | 1.10 | 0.60 |
| SHP0735P-F151A | 150 | ±20% | 1,126 | 1,398 | 1.00 | 0.50 |
| SHP0735P-F181A | 180 | ±20% | 1,257 | 1,589 | 0.90 | 0.50 |
| SHP0735P-F221A | 220 | ±20% | 1,397 | 1,763 | 0.80 | 0.45 |
| SHP0735P-F331A | 330 | ±20% | 2,629 | 3,623 | 0.70 | 0.40 |
| SHP0735P-F471A | 470 | ±20% | 2,998 | 4,301 | 0.60 | 0.30 |

*1:Inductance is mesured at 100kHz. / インダクタンス測定、100kHz.
*2:DC_current based upon 30% inductance reduction from the initial value.
/ インダクタンスが初期値より-30%になる電流値
*3:DC_current based upon 35℃ temperature rise. / 温度上昇ΔT＝35℃max.になる電流値
*4:Coil operation temperature is –25℃～120℃ / A type , -40℃～125℃ / AP type( includes temperature when the coil is heated )
/ コイルの使用温度範囲は-25℃～120℃ / A type , -40℃～125℃ / AP type(コイルの発熱含む)

# SHP0745P SERIES

| Part No. | Inductance *1 | Tolerance | TYP. DCR | Max. DCR | DC Superimposition current *2 | Temperature rise current *3 |
|---|---|---|---|---|---|---|
| 部品番号 | インダクタンス (uH) | 許容差 | 直流抵抗 (mΩ) | 最大直流抵抗 (mΩ) | 直流重畳許容電流 (A) | 温度上昇許容電流 (A) |
| SHP0745P-F3R3AP | 3.3 | ±30% | 17 | 22 | 5.31 | 4.80 |
| SHP0745P-F4R7AP | 4.7 | ±30% | 27 | 31 | 4.50 | 4.00 |
| SHP0745P-F5R6AP | 5.6 | ±30% | 30 | 35 | 4.41 | 3.80 |
| SHP0745P-F6R8AP | 6.8 | ±30% | 33 | 38 | 3.96 | 3.60 |
| SHP0745P-F8R2AP | 8.2 | ±30% | 40 | 50 | 3.42 | 3.18 |
| SHP0745P-F100AP | 10 | ±20% | 48 | 57 | 2.97 | 2.98 |
| SHP0745P-F120AP | 12 | ±20% | 56 | 67 | 2.88 | 2.75 |
| SHP0745P-F150AP | 15 | ±20% | 64 | 77 | 2.52 | 2.51 |
| SHP0745P-F180AP | 18 | ±20% | 88 | 105 | 2.34 | 2.18 |
| SHP0745P-F220AP | 22 | ±20% | 98 | 118 | 2.07 | 1.97 |
| SHP0745P-F330AP | 33 | ±20% | 154 | 185 | 1.71 | 1.76 |
| SHP0745P-F470AP | 47 | ±20% | 214 | 253 | 1.44 | 1.50 |
| SHP0745P-F560AP | 56 | ±20% | 238 | 288 | 1.26 | 1.40 |
| SHP0745P-F680AP | 68 | ±20% | 347 | 399 | 1.17 | 1.36 |
| SHP0745P-F820AP | 82 | ±20% | 386 | 445 | 1.08 | 1.15 |
| SHP0745P-F101AP | 100 | ±20% | 464 | 533 | 0.99 | 1.06 |
| SHP0745P-F121AP | 120 | ±20% | 513 | 590 | 0.90 | 0.94 |
| SHP0745P-F151AP | 150 | ±20% | 670 | 770 | 0.81 | 0.82 |
| SHP0745P-F181AP | 180 | ±20% | 741 | 851 | 0.72 | 0.72 |
| SHP0745P-F221AP | 220 | ±20% | 926 | 1,060 | 0.63 | 0.61 |
| SHP0745P-F331AP | 330 | ±20% | 1,681 | 1,930 | 0.54 | 0.52 |
| SHP0745P-F471AP | 470 | ±20% | 2,087 | 2,400 | 0.45 | 0.41 |

*1:Inductance is mesured at 100kHz. / インダクタンス測定、100kHz.
*2:DC_current based upon 30% inductance reduction from the initial value.
/ インダクタンスが初期値より-30%になる電流値
*3:DC_current based upon 35℃ temperature rise. / 温度上昇ΔT=35℃max.になる電流値
*4:Coil operation temperature is –40℃～125℃( includes temperature when the coil is heated )
/ コイルの使用温度範囲は-40℃～125℃(コイルの発熱含む)

# SHP0760P SERIES

| Part No. | Inductance *1 | Tolerance | TYP. DCR | Max. DCR | DC Superimposition current *2 | Temperature rise current *3 |
|---|---|---|---|---|---|---|
| 部品番号 | インダクタンス (uH) | 許容差 | 直流抵抗 (mΩ) | 最大直流抵抗 (mΩ) | 直流重畳許容電流 (A) | 温度上昇許容電流 (A) |
| SHP0760P-F3R3AP | 3.3 | ±30% | 14 | 17 | 4.86 | 6.13 |
| SHP0760P-F4R7AP | 4.7 | ±30% | 17 | 20 | 4.14 | 5.33 |
| SHP0760P-F5R6AP | 5.6 | ±30% | 18 | 23 | 3.69 | 5.11 |
| SHP0760P-F6R8AP | 6.8 | ±30% | 24 | 29 | 3.51 | 4.86 |
| SHP0760P-F8R2AP | 8.2 | ±30% | 26 | 32 | 3.15 | 4.47 |
| SHP0760P-F100AP | 10 | ±20% | 30 | 36 | 2.88 | 4.10 |
| SHP0760P-F120AP | 12 | ±20% | 32 | 39 | 2.61 | 3.69 |
| SHP0760P-F150AP | 15 | ±20% | 46 | 53 | 2.25 | 3.21 |
| SHP0760P-F180AP | 18 | ±20% | 51 | 60 | 2.16 | 3.00 |
| SHP0760P-F220AP | 22 | ±20% | 56 | 69 | 1.98 | 2.74 |
| SHP0760P-F330AP | 33 | ±20% | 82 | 95 | 1.62 | 1.94 |
| SHP0760P-F470AP | 47 | ±20% | 113 | 128 | 1.35 | 1.70 |
| SHP0760P-F560AP | 56 | ±20% | 151 | 182 | 1.17 | 1.65 |
| SHP0760P-F680AP | 68 | ±20% | 170 | 200 | 1.08 | 1.54 |
| SHP0760P-F820AP | 82 | ±20% | 188 | 217 | 0.99 | 1.32 |
| SHP0760P-F101AP | 100 | ±20% | 228 | 265 | 0.90 | 1.20 |
| SHP0760P-F121AP | 120 | ±20% | 288 | 331 | 0.81 | 1.19 |
| SHP0760P-F151AP | 150 | ±20% | 382 | 440 | 0.72 | 0.92 |
| SHP0760P-F181AP | 180 | ±20% | 455 | 524 | 0.68 | 0.87 |
| SHP0760P-F221AP | 220 | ±20% | 515 | 594 | 0.63 | 0.72 |
| SHP0760P-F331AP | 330 | ±20% | 780 | 897 | 0.45 | 0.67 |
| SHP0760P-F471AP | 470 | ±20% | 1,167 | 1,342 | 0.36 | 0.62 |

*1:Inductance is mesured at 100kHz. / インダクタンス測定、100kHz.
*2:DC_current based upon 30% inductance reduction from the initial value.
/ インダクタンスが初期値より-30%になる電流値
*3:DC_current based upon 35℃ temperature rise. / 温度上昇ΔT=35℃max.になる電流値
*4:Coil operation temperature is −40℃～125℃( includes temperature when the coil is heated )
/ コイルの使用温度範囲は-40℃～125℃(コイルの発熱含む)

# SHP1035P SERIES

| Part No. | Inductance *1 | Tolerance | TYP. DCR | Max. DCR | DC Superimposition current *2 | Temperature rise current *3 |
|---|---|---|---|---|---|---|
| 部品番号 | インダクタンス (uH) | 許容差 | 直流抵抗 (mΩ) | 最大直流抵抗 (mΩ) | 直流重畳許容電流 (A) | 温度上昇許容電流 (A) |
| SHP1035P-F3R3A | 3.3 | ±30% | 24 | 27 | 9.50 | 5.70 |
| SHP1035P-F4R7A | 4.7 | ±30% | 34 | 39 | 8.70 | 5.20 |
| SHP1035P-F5R6A | 5.6 | ±30% | 38 | 43 | 7.90 | 4.70 |
| SHP1035P-F6R8A | 6.8 | ±30% | 44 | 51 | 6.60 | 4.20 |
| SHP1035P-F8R2A | 8.2 | ±30% | 47 | 60 | 6.30 | 3.70 |
| SHP1035P-F100A | 10 | ±20% | 68 | 73 | 6.00 | 3.40 |
| SHP1035P-F120A | 12 | ±20% | 74 | 86 | 5.70 | 2.40 |
| SHP1035P-F150A | 15 | ±20% | 88 | 139 | 4.80 | 2.20 |
| SHP1035P-F180A | 18 | ±20% | 121 | 145 | 4.40 | 2.10 |
| SHP1035P-F220A | 22 | ±20% | 129 | 151 | 4.20 | 2.00 |
| SHP1035P-F330A | 33 | ±20% | 205 | 235 | 3.00 | 1.50 |
| SHP1035P-F470A | 47 | ±20% | 277 | 325 | 2.90 | 1.40 |
| SHP1035P-F560A | 56 | ±20% | 307 | 340 | 2.60 | 1.30 |
| SHP1035P-F680A | 68 | ±20% | 465 | 510 | 2.20 | 1.20 |
| SHP1035P-F820A | 82 | ±20% | 517 | 610 | 1.90 | 1.10 |
| SHP1035P-F101A | 100 | ±20% | 636 | 733 | 1.80 | 1.00 |
| SHP1035P-F121A | 120 | ±20% | 792 | 908 | 1.60 | 0.90 |
| SHP1035P-F151A | 150 | ±20% | 866 | 1,016 | 1.30 | 0.80 |
| SHP1035P-F181A | 180 | ±20% | 1,149 | 1,270 | 1.20 | 0.70 |
| SHP1035P-F221A | 220 | ±20% | 1,916 | 2,169 | 1.10 | 0.60 |
| SHP1035P-F331A | 330 | ±20% | 2,348 | 2,691 | 1.00 | 0.40 |
| SHP1035P-F471A | 470 | ±20% | 3,770 | 4,957 | 0.80 | 0.20 |

*1:Inductance is mesured at 100kHz. / インダクタンス測定、100kHz.
*2:DC_current based upon 30% inductance reduction from the initial value.
/ インダクタンスが初期値より-30%になる電流値
*3:DC_current based upon 35℃ temperature rise. / 温度上昇ΔT=35℃max.になる電流値
*4:Coil operation temperature is –25℃～120℃( includes temperature when the coil is heated )
/ コイルの使用温度範囲は-25℃～120℃(コイルの発熱含む)

# SHP1045P SERIES

| Part No. | Inductance *1 | Tolerance | TYP. DCR | Max. DCR | DC Superimposition current *2 | Temperature rise current *3 |
|---|---|---|---|---|---|---|
| 部品番号 | インダクタンス (uH) | 許容差 | 直流抵抗 (mΩ) | 最大直流抵抗 (mΩ) | 直流重畳許容電流 (A) | 温度上昇許容電流 (A) |
| SHP1045P-F3R3AP | 3.3 | ±30% | 15 | 18 | 8.50 | 6.10 |
| SHP1045P-F4R7AP | 4.7 | ±30% | 18 | 22 | 6.30 | 5.50 |
| SHP1045P-F5R6AP | 5.6 | ±30% | 23 | 27 | 5.90 | 5.10 |
| SHP1045P-F6R8AP | 6.8 | ±30% | 22 | 29 | 5.60 | 4.70 |
| SHP1045P-F8R2AP | 8.2 | ±30% | 29 | 36 | 5.20 | 4.00 |
| SHP1045P-F100AP | 10 | ±20% | 33 | 42 | 4.90 | 3.60 |
| SHP1045P-F120AP | 12 | ±20% | 37 | 43 | 4.70 | 3.40 |
| SHP1045P-F150AP | 15 | ±20% | 53 | 65 | 4.10 | 3.20 |
| SHP1045P-F180AP | 18 | ±20% | 57 | 66 | 3.40 | 3.00 |
| SHP1045P-F220AP | 22 | ±20% | 75 | 89 | 3.30 | 2.90 |
| SHP1045P-F330AP | 33 | ±20% | 122 | 159 | 2.70 | 2.20 |
| SHP1045P-F470AP | 47 | ±20% | 162 | 196 | 2.40 | 1.90 |
| SHP1045P-F560AP | 56 | ±20% | 188 | 215 | 2.20 | 1.50 |
| SHP1045P-F680AP | 68 | ±20% | 212 | 242 | 2.00 | 1.40 |
| SHP1045P-F820AP | 82 | ±20% | 228 | 265 | 1.80 | 1.30 |
| SHP1045P-F101AP | 100 | ±20% | 354 | 414 | 1.50 | 1.20 |
| SHP1045P-F121AP | 120 | ±20% | 395 | 472 | 1.40 | 1.00 |
| SHP1045P-F151AP | 150 | ±20% | 470 | 575 | 1.30 | 0.90 |
| SHP1045P-F181AP | 180 | ±20% | 525 | 633 | 1.20 | 0.80 |
| SHP1045P-F221AP | 220 | ±20% | 707 | 874 | 1.00 | 0.70 |
| SHP1045P-F331AP | 330 | ±20% | 1,085 | 1,300 | 0.80 | 0.60 |
| SHP1045P-F471AP | 470 | ±20% | 1,621 | 1,716 | 0.70 | 0.50 |

*1：Inductance is mesured at 100kHz. / インダクタンス測定、100kHz.
*2：DC_current based upon 30% inductance reduction from the initial value.
/ インダクタンスが初期値より-30%になる電流値
*3：DC_current based upon 35℃ temperature rise. / 温度上昇ΔT＝35℃max.になる電流値
*4：Coil operation temperature is –40℃～125℃(includes temperature when the coil is heated)
/ コイルの使用温度範囲は-40℃～125℃(コイルの発熱含む)

# SHP1055P SERIES

| Part No. | Inductance *1 | Tolerance | TYP. DCR | Max. DCR | DC Superimposition current *2 | Temperature rise current *3 |
|---|---|---|---|---|---|---|
| 部品番号 | インダクタンス (uH) | 許容差 | 直流抵抗 (mΩ) | 最大直流抵抗 (mΩ) | 直流重畳許容電流 (A) | 温度上昇許容電流 (A) |
| SHP1055P-F3R3AP | 3.3 | ±30% | 11 | 14 | 9.60 | 7.20 |
| SHP1055P-F4R7AP | 4.7 | ±30% | 16 | 18 | 8.70 | 5.80 |
| SHP1055P-F5R6AP | 5.6 | ±30% | 18 | 20 | 8.30 | 5.70 |
| SHP1055P-F6R8AP | 6.8 | ±30% | 21 | 23 | 7.60 | 5.10 |
| SHP1055P-F8R2AP | 8.2 | ±30% | 26 | 30 | 6.90 | 4.70 |
| SHP1055P-F100AP | 10 | ±20% | 34 | 39 | 6.20 | 4.00 |
| SHP1055P-F120AP | 12 | ±20% | 35 | 41 | 5.80 | 3.80 |
| SHP1055P-F150AP | 15 | ±20% | 43 | 48 | 4.90 | 3.50 |
| SHP1055P-F180AP | 18 | ±20% | 47 | 51 | 4.50 | 3.40 |
| SHP1055P-F220AP | 22 | ±20% | 55 | 59 | 4.20 | 3.30 |
| SHP1055P-F330AP | 33 | ±20% | 83 | 101 | 3.10 | 2.70 |
| SHP1055P-F470AP | 47 | ±20% | 118 | 132 | 2.90 | 2.00 |
| SHP1055P-F560AP | 56 | ±20% | 137 | 158 | 2.60 | 1.80 |
| SHP1055P-F680AP | 68 | ±20% | 160 | 169 | 2.30 | 1.70 |
| SHP1055P-F820AP | 82 | ±20% | 184 | 190 | 1.90 | 1.60 |
| SHP1055P-F101AP | 100 | ±20% | 219 | 233 | 1.80 | 1.50 |
| SHP1055P-F121AP | 120 | ±20% | 297 | 338 | 1.60 | 1.40 |
| SHP1055P-F151AP | 150 | ±20% | 322 | 366 | 1.40 | 1.20 |
| SHP1055P-F181AP | 180 | ±20% | 366 | 416 | 1.30 | 1.10 |
| SHP1055P-F221AP | 220 | ±20% | 486 | 574 | 1.10 | 1.00 |
| SHP1055P-F331AP | 330 | ±20% | 774 | 867 | 1.00 | 0.70 |
| SHP1055P-F471AP | 470 | ±20% | 1,083 | 1,318 | 0.80 | 0.60 |

*1:Inductance is mesured at 100kHz. / インダクタンス測定、100kHz.
*2:DC_current based upon 30% inductance reduction from the initial value.
/ インダクタンスが初期値より-30%になる電流値
*3:DC_current based upon 35℃ temperature rise. / 温度上昇ΔT=35℃max.になる電流値
*4:Coil operation temperature is −40℃～125℃( includes temperature when the coil is heated )
/ コイルの使用温度範囲は-40℃～125℃(コイルの発熱含む)

# SHP1235P SERIES

| Part No. | Inductance *1 | Tolerance | TYP. DCR | Max. DCR | DC Superimposition current *2 | Temperature rise current *3 |
|---|---|---|---|---|---|---|
| 部品番号 | インダクタンス (uH) | 許容差 | 直流抵抗 (mΩ) | 最大直流抵抗 (mΩ) | 直流重畳許容電流 (A) | 温度上昇許容電流 (A) |
| SHP1235P-F3R3A | 3.3 | ±30% | 19 | 21 | 9.60 | 6.00 |
| SHP1235P-F4R7A | 4.7 | ±30% | 25 | 27 | 8.50 | 5.40 |
| SHP1235P-F5R6A | 5.6 | ±30% | 30 | 35 | 7.70 | 4.50 |
| SHP1235P-F6R8A | 6.8 | ±30% | 34 | 37 | 6.70 | 4.30 |
| SHP1235P-F8R2A | 8.2 | ±30% | 47 | 52 | 6.20 | 3.60 |
| SHP1235P-F100A | 10 | ±20% | 52 | 58 | 6.00 | 3.50 |
| SHP1235P-F120A | 12 | ±20% | 58 | 63 | 5.90 | 3.20 |
| SHP1235P-F150A | 15 | ±20% | 67 | 71 | 5.40 | 3.10 |
| SHP1235P-F180A | 18 | ±20% | 74 | 76 | 4.80 | 2.20 |
| SHP1235P-F220A | 22 | ±20% | 83 | 89 | 4.30 | 2.10 |
| SHP1235P-F330A | 33 | ±20% | 120 | 133 | 3.30 | 1.80 |
| SHP1235P-F470A | 47 | ±20% | 170 | 181 | 2.80 | 1.70 |
| SHP1235P-F680A | 68 | ±20% | 251 | 275 | 2.30 | 1.50 |
| SHP1235P-F820A | 82 | ±20% | 373 | 377 | 1.90 | 1.40 |
| SHP1235P-F101A | 100 | ±20% | 414 | 424 | 1.80 | 1.20 |
| SHP1235P-F121A | 120 | ±20% | 473 | 488 | 1.70 | 1.10 |
| SHP1235P-F151A | 150 | ±20% | 582 | 848 | 1.60 | 1.00 |
| SHP1235P-F181A | 180 | ±20% | 659 | 860 | 1.30 | 0.90 |
| SHP1235P-F221A | 220 | ±20% | 849 | 871 | 1.10 | 0.80 |
| SHP1235P-F331A | 330 | ±20% | 1,284 | 1,326 | 0.90 | 0.70 |
| SHP1235P-F471A | 470 | ±20% | 1,787 | 1,900 | 0.80 | 0.60 |

*1:Inductance is mesured at 100kHz. / インダクタンス測定、100kHz.
*2:DC_current based upon 30% inductance reduction from the initial value.
/ インダクタンスが初期値より-30%になる電流値
*3:DC_current based upon 35℃ temperature rise. / 温度上昇ΔT=35℃max.になる電流値
*4:Coil operation temperature is –25℃～120℃( includes temperature when the coil is heated )
/ コイルの使用温度範囲は-25℃～120℃(コイルの発熱含む)

# SHP1245P SERIES

| Part No. | Inductance *1 | Tolerance | TYP. DCR | Max. DCR | DC Superimposition current *2 | Temperature rise current *3 |
|---|---|---|---|---|---|---|
| 部品番号 | インダクタンス (uH) | 許容差 | 直流抵抗 (mΩ) | 最大直流抵抗 (mΩ) | 直流重畳許容電流 (A) | 温度上昇許容電流 (A) |
| SHP1245P-F3R3A | 3.3 | ±30% | 15 | 18 | 9.70 | 6.70 |
| SHP1245P-F4R7A | 4.7 | ±30% | 18 | 20 | 8.70 | 6.20 |
| SHP1245P-F5R6A | 5.6 | ±30% | 19 | 23 | 8.20 | 6.10 |
| SHP1245P-F6R8A | 6.8 | ±30% | 22 | 25 | 7.20 | 5.30 |
| SHP1245P-F8R2A | 8.2 | ±30% | 25 | 27 | 6.90 | 5.00 |
| SHP1245P-F100A | 10 | ±20% | 32 | 37 | 6.30 | 4.70 |
| SHP1245P-F120A | 12 | ±20% | 35 | 40 | 6.00 | 4.00 |
| SHP1245P-F150A | 15 | ±20% | 39 | 43 | 5.50 | 3.70 |
| SHP1245P-F180A | 18 | ±20% | 46 | 50 | 5.10 | 3.50 |
| SHP1245P-F220A | 22 | ±20% | 61 | 63 | 4.40 | 3.20 |
| SHP1245P-F330A | 33 | ±20% | 74 | 77 | 3.40 | 2.90 |
| SHP1245P-F470A | 47 | ±20% | 114 | 122 | 2.90 | 2.50 |
| SHP1245P-F560A | 56 | ±20% | 120 | 136 | 2.80 | 2.30 |
| SHP1245P-F680A | 68 | ±20% | 155 | 181 | 2.60 | 1.80 |
| SHP1245P-F820A | 82 | ±20% | 194 | 211 | 2.50 | 1.60 |
| SHP1245P-F101A | 100 | ±20% | 227 | 253 | 2.00 | 1.50 |
| SHP1245P-F121A | 120 | ±20% | 319 | 334 | 1.90 | 1.40 |
| SHP1245P-F151A | 150 | ±20% | 373 | 403 | 1.60 | 1.30 |
| SHP1245P-F181A | 180 | ±20% | 410 | 449 | 1.30 | 1.20 |
| SHP1245P-F221A | 220 | ±20% | 548 | 621 | 1.20 | 1.00 |
| SHP1245P-F331A | 330 | ±20% | 759 | 828 | 1.10 | 0.90 |
| SHP1245P-F471A | 470 | ±20% | 1,091 | 1,127 | 1.00 | 0.70 |

*1:Inductance is mesured at 100kHz. / インダクタンス測定、100kHz.
*2:DC_current based upon 30% inductance reduction from the initial value.
/ インダクタンスが初期値より-30%になる電流値
*3:DC_current based upon 35℃ temperature rise. / 温度上昇ΔT=35℃max.になる電流値
*4:Coil operation temperature is –25℃～120℃( includes temperature when the coil is heated )
/ コイルの使用温度範囲は-25℃～120℃(コイルの発熱含む)

# SHP1260P SERIES

| Part No. | Inductance *1 | Tolerance | TYP. DCR | Max. DCR | DC Superimposition current *2 | Temperature rise current *3 |
|---|---|---|---|---|---|---|
| 部品番号 | インダクタンス (uH) | 許容差 | 直流抵抗 (mΩ) | 最大直流抵抗 (mΩ) | 直流重畳許容電流 (A) | 温度上昇許容電流 (A) |
| SHP1260P-F3R3AP | 3.3 | ±30% | 8 | 11 | 10.90 | 9.60 |
| SHP1260P-F4R7AP | 4.7 | ±30% | 10 | 12 | 7.30 | 8.20 |
| SHP1260P-F5R6AP | 5.6 | ±30% | 12 | 13 | 6.90 | 7.70 |
| SHP1260P-F6R8AP | 6.8 | ±30% | 12 | 15 | 5.80 | 7.10 |
| SHP1260P-F8R2AP | 8.2 | ±30% | 14 | 19 | 5.60 | 6.90 |
| SHP1260P-F100AP | 10 | ±20% | 20 | 21 | 5.30 | 6.30 |
| SHP1260P-F120AP | 12 | ±20% | 22 | 23 | 5.00 | 6.20 |
| SHP1260P-F150AP | 15 | ±20% | 24 | 26 | 4.80 | 5.40 |
| SHP1260P-F180AP | 18 | ±20% | 33 | 34 | 4.60 | 4.70 |
| SHP1260P-F220AP | 22 | ±20% | 34 | 40 | 4.20 | 4.60 |
| SHP1260P-F330AP | 33 | ±20% | 56 | 58 | 3.20 | 3.40 |
| SHP1260P-F470AP | 47 | ±20% | 75 | 83 | 2.80 | 3.00 |
| SHP1260P-F560AP | 56 | ±20% | 83 | 93 | 2.70 | 2.70 |
| SHP1260P-F680AP | 68 | ±20% | 115 | 127 | 2.30 | 2.40 |
| SHP1260P-F820AP | 82 | ±20% | 129 | 140 | 1.90 | 2.20 |
| SHP1260P-F101AP | 100 | ±20% | 149 | 157 | 1.80 | 1.90 |
| SHP1260P-F121AP | 120 | ±20% | 162 | 181 | 1.60 | 1.70 |
| SHP1260P-F151AP | 150 | ±20% | 213 | 247 | 1.30 | 1.50 |
| SHP1260P-F181AP | 180 | ±20% | 276 | 301 | 1.20 | 1.40 |
| SHP1260P-F221AP | 220 | ±20% | 320 | 355 | 1.10 | 1.30 |
| SHP1260P-F331AP | 330 | ±20% | 513 | 566 | 0.90 | 1.10 |
| SHP1260P-F471AP | 470 | ±20% | 773 | 853 | 0.80 | 0.90 |
| SHP1260P-F561AP | 560 | ±20% | 1,135 | 1,210 | 0.78 | 0.70 |
| SHP1260P-F681AP | 680 | ±20% | 1,234 | 1,370 | 0.73 | 0.66 |
| SHP1260P-F821AP | 820 | ±20% | 1,747 | 1,810 | 0.67 | 0.57 |
| SHP1260P-F102AP | 1,000 | ±20% | 1,836 | 1,950 | 0.61 | 0.55 |
| SHP1260P-F152AP | 1,500 | ±20% | 2,789 | 2,950 | 0.48 | 0.45 |
| SHP1260P-F222AP | 2,200 | ±20% | 4,085 | 4,270 | 0.41 | 0.37 |
| SHP1260P-F332AP | 3,300 | ±20% | 5,210 | 5,900 | 0.37 | 0.31 |
| SHP1260P-F472AP | 4,700 | ±20% | 8,665 | 9,560 | 0.31 | 0.25 |
| SHP1260P-F682AP | 6,800 | ±20% | 15,185 | 16,400 | 0.26 | 0.19 |
| SHP1260P-F103AP | 10,000 | ±20% | 23,550 | 26,000 | 0.20 | 0.15 |

*1:Inductance of F3R3A ～ F821A is mesured at 100kHz. / F3R3A ～ F821Aインダクタンス測定、100kHz.
Inductance of F102A ～ F103A is mesured at 1kHz. / F102A ～ F103Aインダクタンス測定、1kHz.
*2:DC_current based upon 30% inductance reduction from the initial value.
/ インダクタンスが初期値より-30%になる電流値
*3:DC_current based upon 35℃ temperature rise. / 温度上昇ΔT=35℃max.になる電流値
*4:Coil operation temperature is –40℃～125℃( includes temperature when the coil is heated )
/ コイルの使用温度範囲は-40℃～125℃(コイルの発熱含む)

# SHP1280P SERIES

| Part No. | Inductance *1 | Tolerance | TYP. DCR | Max. DCR | DC Superimposition current *2 | Temperature rise current *3 |
|---|---|---|---|---|---|---|
| 部品番号 | インダクタンス (uH) | 許容差 | 直流抵抗 (mΩ) | 最大直流抵抗 (mΩ) | 直流重畳許容電流 (A) | 温度上昇許容電流 (A) |
| SHP1280P-F3R3AP | 3.3 | ±30% | 6 | 9 | 11.50 | 10.00 |
| SHP1280P-F4R7AP | 4.7 | ±30% | 8 | 10 | 9.40 | 9.00 |
| SHP1280P-F5R6AP | 5.6 | ±30% | 9 | 12 | 8.00 | 8.20 |
| SHP1280P-F6R8AP | 6.8 | ±30% | 9 | 13 | 6.90 | 7.90 |
| SHP1280P-F100AP | 10 | ±20% | 12 | 15 | 6.10 | 7.30 |
| SHP1280P-F120AP | 12 | ±20% | 14 | 19 | 5.50 | 6.50 |
| SHP1280P-F150AP | 15 | ±20% | 16 | 23 | 4.90 | 5.80 |
| SHP1280P-F180AP | 18 | ±20% | 19 | 25 | 4.50 | 5.60 |
| SHP1280P-F220AP | 22 | ±20% | 22 | 32 | 3.80 | 4.90 |
| SHP1280P-F330AP | 33 | ±20% | 35 | 49 | 3.10 | 3.90 |
| SHP1280P-F470AP | 47 | ±20% | 50 | 67 | 2.70 | 3.30 |
| SHP1280P-F560AP | 56 | ±20% | 51 | 77 | 2.50 | 3.10 |
| SHP1280P-F680AP | 68 | ±20% | 64 | 85 | 2.20 | 2.90 |
| SHP1280P-F820AP | 82 | ±20% | 80 | 105 | 2.00 | 2.60 |
| SHP1280P-F101AP | 100 | ±20% | 87 | 114 | 1.90 | 2.50 |
| SHP1280P-F121AP | 120 | ±20% | 129 | 153 | 1.70 | 2.20 |
| SHP1280P-F151AP | 150 | ±20% | 148 | 180 | 1.50 | 2.00 |
| SHP1280P-F181AP | 180 | ±20% | 158 | 200 | 1.40 | 1.90 |
| SHP1280P-F221AP | 220 | ±20% | 212 | 271 | 1.20 | 1.60 |
| SHP1280P-F331AP | 330 | ±20% | 303 | 395 | 1.00 | 1.30 |
| SHP1280P-F471AP | 470 | ±20% | 387 | 555 | 0.86 | 1.10 |
| SHP1280P-F561AP | 560 | ±20% | 463 | 600 | 0.79 | 1.05 |
| SHP1280P-F681AP | 680 | ±20% | 537 | 650 | 0.72 | 1.00 |
| SHP1280P-F821AP | 820 | ±20% | 717 | 840 | 0.65 | 0.89 |
| SHP1280P-F102AP | 1,000 | ±20% | 908 | 1,020 | 0.59 | 0.83 |
| SHP1280P-F152AP | 1,500 | ±20% | 1,300 | 1,510 | 0.48 | 0.67 |
| SHP1280P-F222AP | 2,200 | ±20% | 1,741 | 1,930 | 0.40 | 0.57 |
| SHP1280P-F332AP | 3,300 | ±20% | 2,308 | 2,800 | 0.33 | 0.47 |
| SHP1280P-F472AP | 4,700 | ±20% | 3,820 | 4,250 | 0.27 | 0.38 |
| SHP1280P-F682AP | 6,800 | ±20% | 5,200 | 6,290 | 0.23 | 0.32 |
| SHP1280P-F103AP | 10,000 | ±20% | 7,860 | 8,860 | 0.18 | 0.26 |

*1:Inductance of F3R3A ～ F821A is mesured at 100kHz. / F3R3A ～ F821Aインダクタンス測定、100kHz.
Inductance of F102A ～ F103A is mesured at 1kHz. / F102A ～ F103Aインダクタンス測定、1kHz.
*2:DC_current based upon 30% inductance reduction from the initial value.
/ インダクタンスが初期値より-30%になる電流値
*3:DC_current based upon 35℃ temperature rise. / 温度上昇ΔT=35℃max.になる電流値
*4:Coil operation temperature is –40℃～125℃( includes temperature when the coil is heated )
/ コイルの使用温度範囲は-40℃～125℃(コイルの発熱含む)

# 外形寸法図　SHPシリーズ

*Dimensions / SHP series*

## SHP0315P / 0320P SERIES

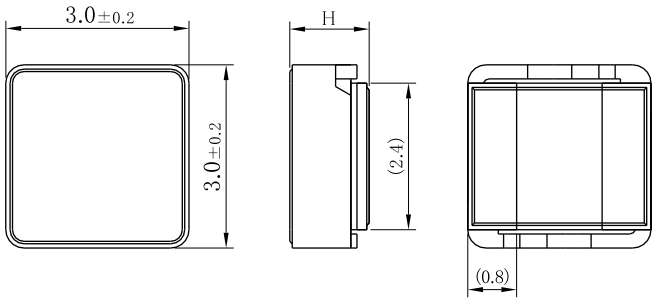


Recommended patterns
推奨ランドパターン

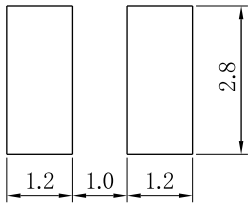


(unit:mm)

H寸法／ SHP0315P:1.5MAX、SHP0320P:2.0MAX

## SHP0415P / 0420P SERIES

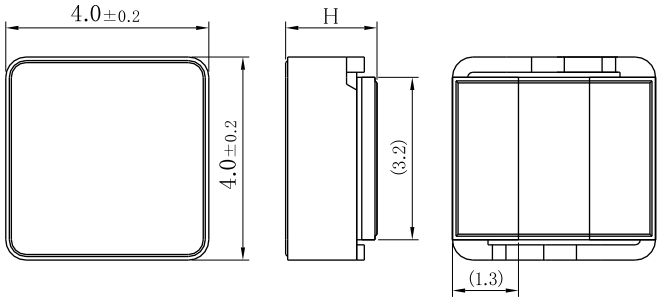


Recommended patterns
推奨ランドパターン

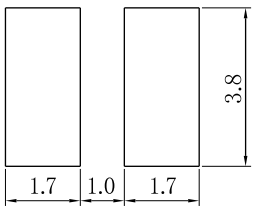


(unit:mm)

H寸法／ SHP0415P:1.5MAX、SHP0420P:2.0MAX

# SHP0520P SERIES

## AP type

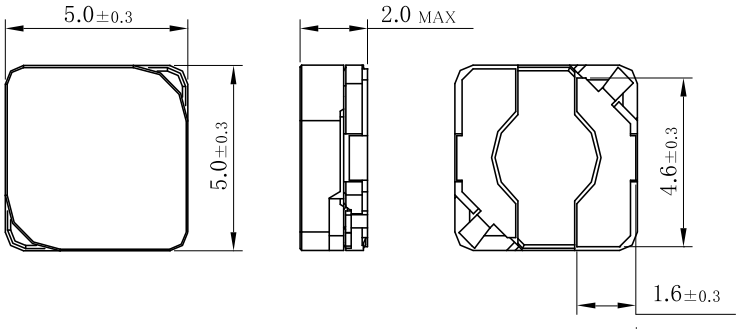


Recommended patterns
推奨ランドパターン
Solder resist recommended
ソルダーレジスト推奨

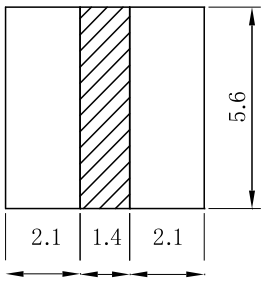


## A type

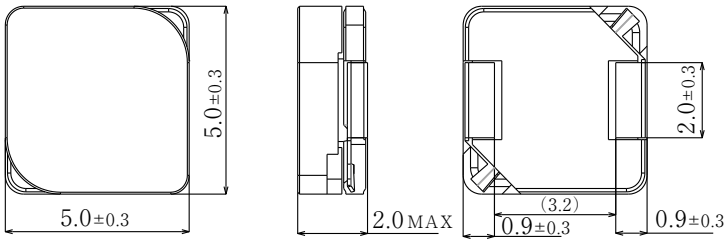


Recommended patterns
推奨ランドパターン

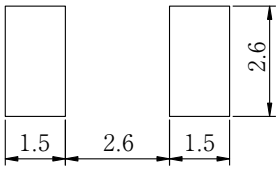


(unit:mm)

# SHP0530P SERIES

Recommended patterns
推奨ランドパターン
Solder resist recommended
ソルダーレジスト推奨

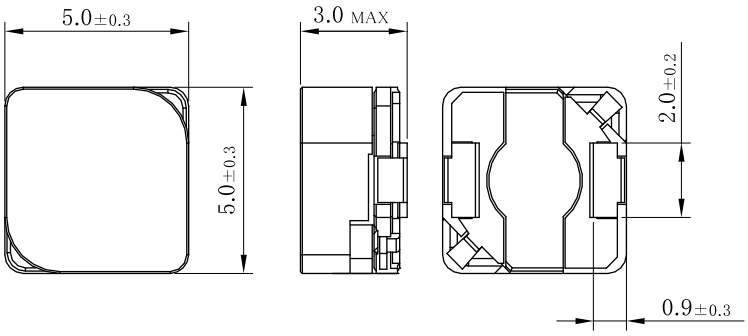


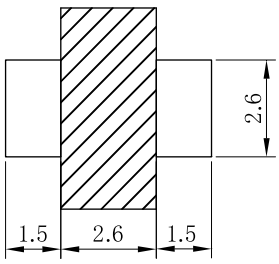


(unit:mm)

# SHP0735P SERIES

## AP type

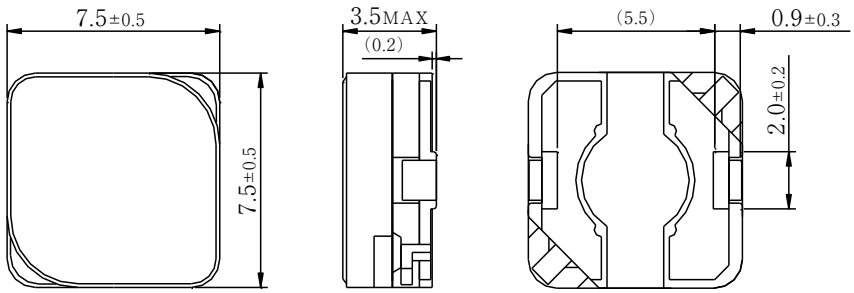


Recommended patterns
推奨ランドパターン

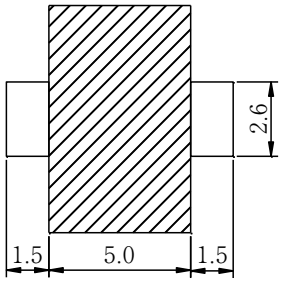


## A type

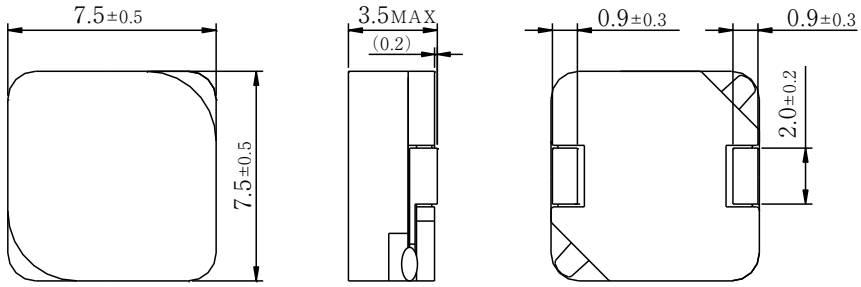


Recommended patterns
推奨ランドパターン

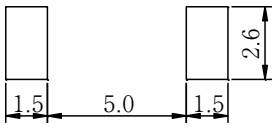


(unit:mm)

# SHP0745P / 0760P SERIES

Recommended patterns
推奨ランドパターン
Solder resist recommended
ソルダーレジスト推奨

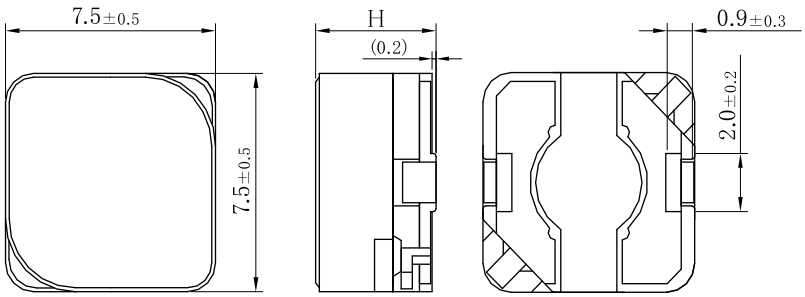


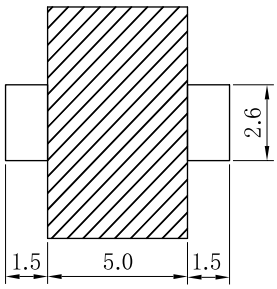


H寸法／ SHP0745A:4.5MAX、SHP0760A:6.0MAX

(unit:mm)

## SHP1035P / 1045P SERIES

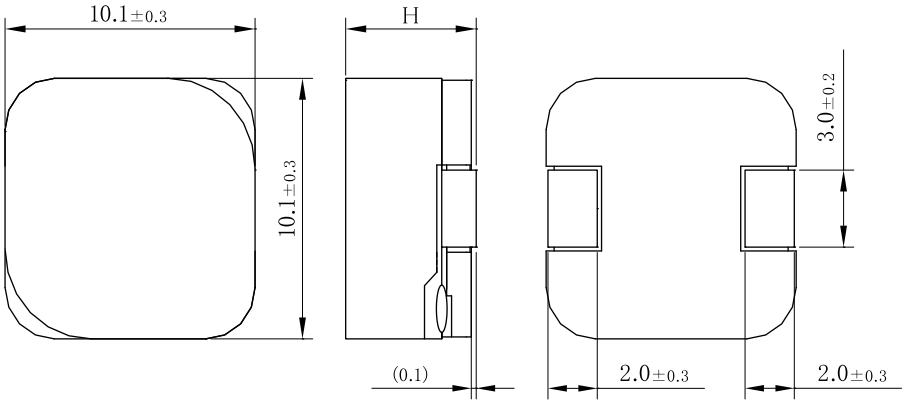


Recommended patterns
推奨ランドパターン

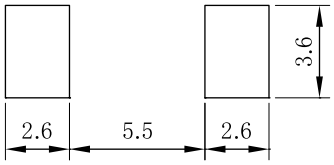


(unit:mm)

H寸法／ SHP1035P:3.5MAX、SHP1045P:4.5MAX

## SHP1055P SERIES

Recommended patterns
推奨ランドパターン
Solder resist recommended
ソルダーレジスト推奨

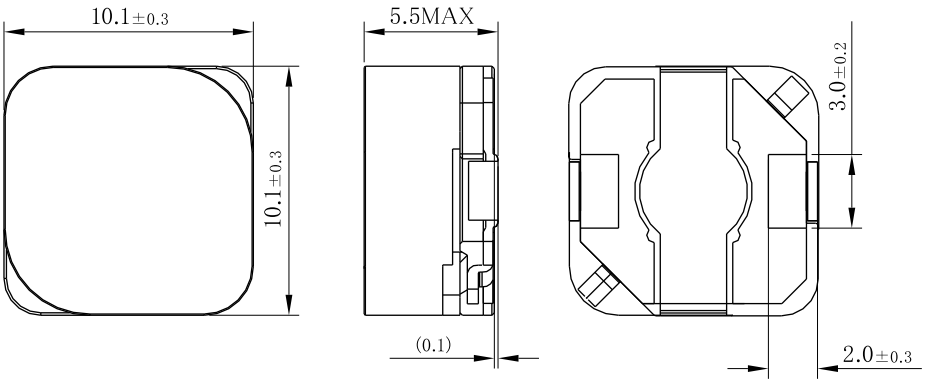


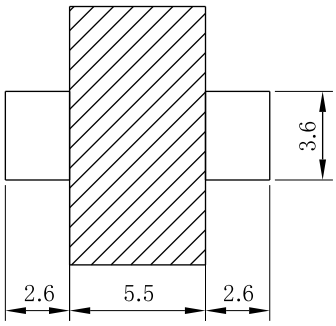


(unit:mm)

# SHP1235P / 1245P SERIES

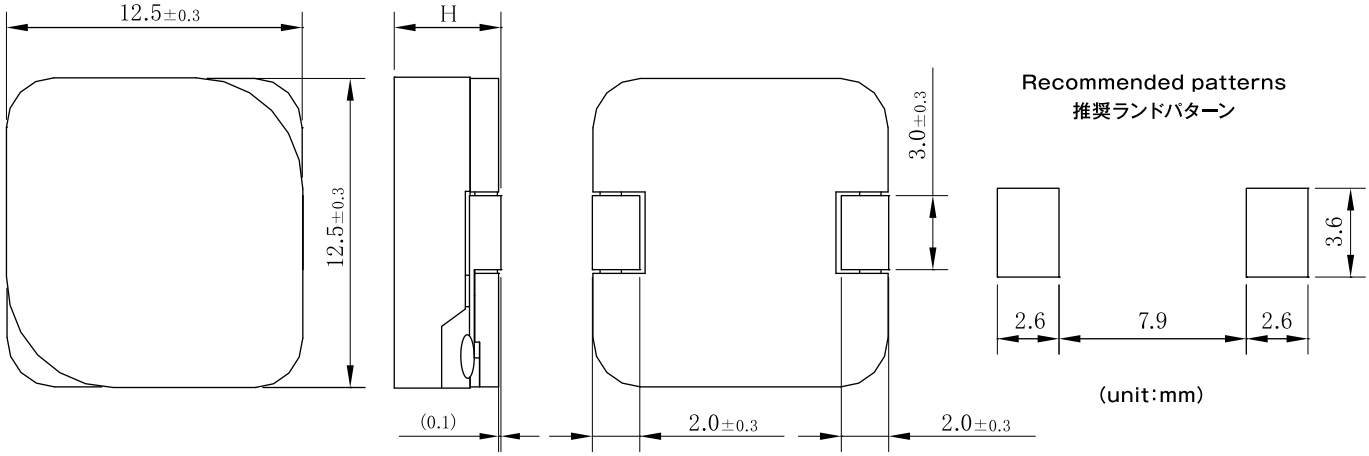


H寸法／ SHP1235P:3.5MAX、SHP1245P:4.5MAX

# SHP1260P / 1280P SERIES

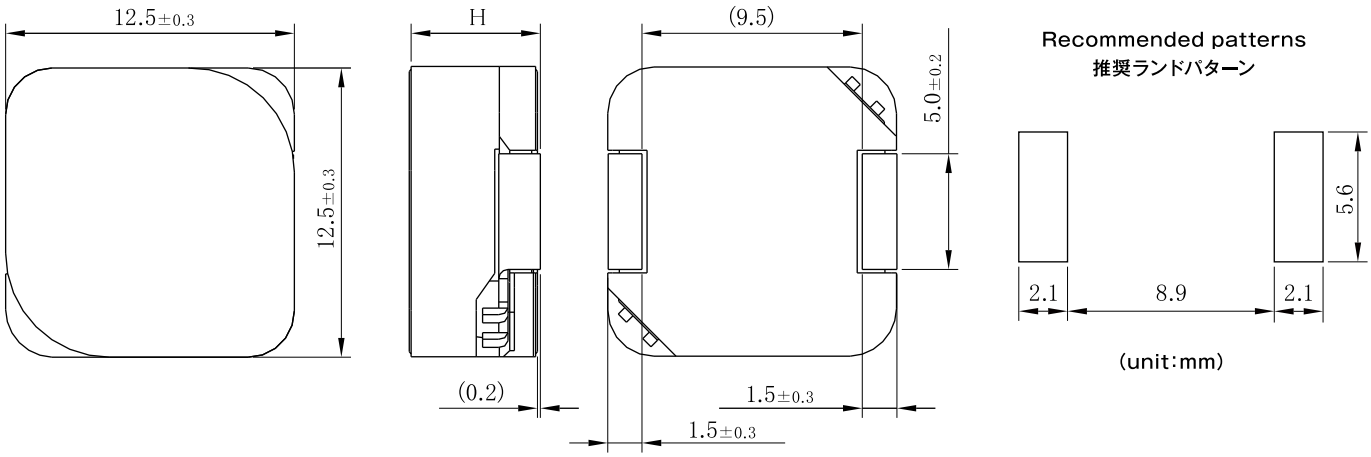


H寸法／ SHP1260P:6.0MAX、SHP1280P:8.0MAX

# TCEパワーインダクタ製品②
# MCPシリーズ

*The TCE power inductor product ② / MCP series*

## FEATURES / 特徴

Large current, low DC-resistance and high efficiency by magnetic metal powder
/ 磁性金属粉末による大電流、低抵抗、高効率
Low acoustic noise and low leakage flux noise by shielded construction
/ 閉磁路構造による低コア鳴き、低漏れ磁束

## PRODUCT NUMBER / 品番例

MCP 1610 - 1R0 C
① ② ③ ④

① Series Code : Metal Composite Type Power Inductor
② Dimensions : (ex) 1.6×1.6×1.0mm
③ Inductance : (ex) 1.0uH
④ Material Code : (ex) C type

① シリーズ名：メタルコンポジットタイプパワーインダクタ
② 寸法：(例) 1.6×1.6×1.0mm
③ インダクタンス(例) 1.0uH
④ 材質：(例)Cタイプ

## MCP1610 SERIES

| Part No. | Inductance *1 | Tolerance | TYP. DCR | Max. DCR | DC Superimposition current *2 | Temperature rise current *3 |
|---|---|---|---|---|---|---|
| 部品番号 | インダクタンス (uH) | 許容差 | 直流抵抗 (mΩ) | 最大直流抵抗 (mΩ) | 直流重畳許容電流 (A) | 温度上昇許容電流 (A) |
| MCP1610-R33C | 0.33 | ±30% | 65 | 84 | 4.20 | 1.90 |
| MCP1610-R47C | 0.47 | ±30% | 77 | 101 | 3.90 | 1.70 |
| MCP1610-R56C | 0.56 | ±30% | 90 | 113 | 3.50 | 1.65 |
| MCP1610-R68C | 0.68 | ±30% | 101 | 126 | 3.30 | 1.55 |
| MCP1610-R82C | 0.82 | ±30% | 115 | 144 | 2.90 | 1.45 |
| MCP1610-1R0C | 1.0 | ±30% | 127 | 159 | 2.70 | 1.40 |
| MCP1610-1R2C | 1.2 | ±30% | 140 | 174 | 2.60 | 1.30 |
| MCP1610-1R5C | 1.5 | ±30% | 189 | 237 | 2.40 | 1.10 |
| MCP1610-2R2C | 2.2 | ±30% | 337 | 388 | 2.00 | 0.90 |

*1：Inductance is mesured at 1MHz. / インダクタンス測定、1MHz.
*2：DC_current based upon 20% inductance reduction from the initial value.
/ インダクタンスが初期値より-20%になる電流値
*3：DC_current based upon 40℃ temperature rise. / 温度上昇ΔT＝40℃max.になる電流値
*4：Coil operation temperature is −40℃～125℃( includes temperature when the coil is heated )
/ コイルの使用温度範囲は-40℃～125℃(コイルの発熱含む)

## MCP201610 SERIES

| Part No. | Inductance *1 | Tolerance | TYP. DCR | Max. DCR | DC Superimposition current *2 | Temperature rise current *3 |
|---|---|---|---|---|---|---|
| 部品番号 | インダクタンス (uH) | 許容差 | 直流抵抗 (mΩ) | 最大直流抵抗 (mΩ) | 直流重畳許容電流 (A) | 温度上昇許容電流 (A) |
| MCP201610-R33C | 0.33 | ±30% | 40 | 53 | 4.50 | 2.50 |
| MCP201610-R47C | 0.47 | ±30% | 49 | 63 | 4.40 | 2.30 |
| MCP201610-R56C | 0.56 | ±30% | 56 | 73 | 4.10 | 2.10 |
| MCP201610-R68C | 0.68 | ±30% | 65 | 84 | 4.00 | 2.00 |
| MCP201610-R82C | 0.82 | ±30% | 71 | 92 | 3.30 | 1.90 |
| MCP201610-1R0C | 1.0 | ±20% | 86 | 104 | 3.20 | 1.80 |
| MCP201610-1R2C | 1.2 | ±20% | 114 | 136 | 2.90 | 1.50 |
| MCP201610-1R5C | 1.5 | ±20% | 150 | 180 | 2.50 | 1.30 |
| MCP201610-2R2C | 2.2 | ±20% | 225 | 270 | 1.90 | 1.10 |

*1:Inductance is mesured at 1MHz. / インダクタンス測定、1MHz.
*2:DC_current based upon 20% inductance reduction from the initial value.
/ インダクタンスが初期値より-20%になる電流値
*3:DC_current based upon 40℃ temperature rise. / 温度上昇ΔT=40℃max.になる電流値
*4:Coil operation temperature is −40℃～125℃( includes temperature when the coil is heated )
/ コイルの使用温度範囲は-40℃～125℃(コイルの発熱含む)

## MCP252006 SERIES

| Part No. | Inductance *1 | Tolerance | TYP. DCR | Max. DCR | DC Superimposition current *2 | Temperature rise current *3 |
|---|---|---|---|---|---|---|
| 部品番号 | インダクタンス (uH) | 許容差 | 直流抵抗 (mΩ) | 最大直流抵抗 (mΩ) | 直流重畳許容電流 (A) | 温度上昇許容電流 (A) |
| MCP252006-R47S | 0.47 | ±30% | 76 | 95 | 4.90 | 1.60 |
| MCP252006-1R0S | 1.0 | ±30% | 163 | 196 | 3.50 | 1.10 |
| MCP252006-2R2S | 2.2 | ±30% | 328 | 377 | 2.10 | 0.80 |

*1:Inductance is mesured at 1MHz. / インダクタンス測定、1MHz.
*2:DC_current based upon 30% inductance reduction from the initial value.
/ インダクタンスが初期値より-30%になる電流値
*3:DC_current based upon 40℃ temperature rise. / 温度上昇ΔT=40℃max.になる電流値
*4:Coil operation temperature is −40℃～125℃( includes temperature when the coil is heated )
/ コイルの使用温度範囲は-40℃～125℃(コイルの発熱含む)
*5:AEC-Q200 Compliant. / AEC-Q200 準拠

## MCP252008 SERIES

| Part No. | Inductance *1 | Tolerance | TYP. DCR | Max. DCR | DC Superimposition current *2 | Temperature rise current *3 |
|---|---|---|---|---|---|---|
| 部品番号 | インダクタンス (uH) | 許容差 | 直流抵抗 (mΩ) | 最大直流抵抗 (mΩ) | 直流重畳許容電流 (A) | 温度上昇許容電流 (A) |
| MCP252008-R47S | 0.47 | ±30% | 70 | 87 | 5.80 | 2.00 |
| MCP252008-1R0S | 1.0 | ±30% | 107 | 133 | 4.50 | 1.60 |
| MCP252008-2R2S | 2.2 | ±30% | 252 | 302 | 2.60 | 1.00 |
| MCP252008-4R7S | 4.7 | ±30% | 450 | 540 | 1.70 | 0.75 |

*1:Inductance is mesured at 1MHz. / インダクタンス測定、1MHz.
*2:DC_current based upon 30% inductance reduction from the initial value.
/ インダクタンスが初期値より-30%になる電流値
*3:DC_current based upon 40℃ temperature rise. / 温度上昇ΔT=40℃max.になる電流値
*4:Coil operation temperature is −40℃~125℃( includes temperature when the coil is heated )
/ コイルの使用温度範囲は-40℃~125℃(コイルの発熱含む)
*5:AEC-Q200 Compliant. / AEC-Q200 準拠

## MCP252010 SERIES

| Part No. | Inductance *1 | Tolerance | TYP. DCR | Max. DCR | DC Superimposition current *2 | Temperature rise current *3 |
|---|---|---|---|---|---|---|
| 部品番号 | インダクタンス (uH) | 許容差 | 直流抵抗 (mΩ) | 最大直流抵抗 (mΩ) | 直流重畳許容電流 (A) | 温度上昇許容電流 (A) |
| MCP252010-R33S | 0.33 | ±30% | 29 | 38 | 6.90 | 3.40 |
| MCP252010-R47S | 0.47 | ±30% | 37 | 48 | 6.00 | 3.00 |
| MCP252010-R68S | 0.68 | ±30% | 46 | 60 | 5.30 | 2.90 |
| MCP252010-R82S | 0.82 | ±30% | 53 | 69 | 5.10 | 2.60 |
| MCP252010-1R0S | 1.0 | ±20% | 63 | 75 | 4.70 | 2.50 |
| MCP252010-1R2S | 1.2 | ±20% | 82 | 106 | 3.90 | 1.90 |
| MCP252010-1R5S | 1.5 | ±20% | 92 | 110 | 3.70 | 1.80 |
| MCP252010-2R2S | 2.2 | ±20% | 147 | 173 | 2.70 | 1.40 |
| MCP252010-3R3S | 3.3 | ±20% | 220 | 253 | 2.10 | 1.10 |
| MCP252010-4R7S | 4.7 | ±20% | 338 | 388 | 2.00 | 0.90 |
| MCP252010-6R8S | 6.8 | ±20% | 563 | 648 | 1.70 | 0.80 |
| MCP252010-8R2S | 8.2 | ±20% | 646 | 743 | 1.60 | 0.70 |
| MCP252010-100S | 10 | ±20% | 733 | 843 | 1.40 | 0.60 |

*1:Inductance is mesured at 1MHz. / インダクタンス測定、1MHz.
*2:DC_current based upon 30% inductance reduction from the initial value.
/ インダクタンスが初期値より-30%になる電流値
*3:DC_current based upon 40℃ temperature rise. / 温度上昇ΔT=40℃max.になる電流値
*4:Coil operation temperature is −40℃~125℃( includes temperature when the coil is heated )
/ コイルの使用温度範囲は-40℃~125℃(コイルの発熱含む)
*5:AEC-Q200 Compliant. / AEC-Q200 準拠

# MCP252012 SERIES

| Part No. | Inductance *1 | Tolerance | TYP. DCR | Max. DCR | DC Superimposition current *2 | Temperature rise current *3 |
|---|---|---|---|---|---|---|
| 部品番号 | インダクタンス (uH) | 許容差 | 直流抵抗 (mΩ) | 最大直流抵抗 (mΩ) | 直流重畳許容電流 (A) | 温度上昇許容電流 (A) |
| MCP252012-R47S | 0.47 | ±30% | 30 | 40 | 6.70 | 3.40 |
| MCP252012-R56S | 0.56 | ±30% | 37 | 49 | 6.40 | 3.10 |
| MCP252012-R68S | 0.68 | ±30% | 45 | 59 | 6.10 | 2.90 |
| MCP252012-1R0S | 1.0 | ±20% | 49 | 60 | 5.70 | 2.80 |
| MCP252012-1R2S | 1.2 | ±20% | 67 | 80 | 5.30 | 2.40 |
| MCP252012-1R5S | 1.5 | ±20% | 82 | 99 | 4.20 | 2.20 |
| MCP252012-2R2S | 2.2 | ±20% | 123 | 141 | 3.40 | 1.60 |
| MCP252012-3R3S | 3.3 | ±20% | 226 | 260 | 3.00 | 1.20 |
| MCP252012-4R7S | 4.7 | ±20% | 300 | 345 | 2.10 | 1.00 |
| MCP252012-5R6S | 5.6 | ±20% | 405 | 465 | 1.90 | 0.90 |
| MCP252012-6R8S | 6.8 | ±20% | 560 | 640 | 1.80 | 0.80 |
| MCP252012-8R2S | 8.2 | ±20% | 630 | 720 | 1.70 | 0.75 |
| MCP252012-100S | 10 | ±20% | 680 | 780 | 1.50 | 0.70 |

*1:Inductance is mesured at 1MHz. / インダクタンス測定、1MHz.
*2:DC_current based upon 30% inductance reduction from the initial value.
/ インダクタンスが初期値より-30%になる電流値
*3:DC_current based upon 40℃ temperature rise. / 温度上昇ΔT=40℃max.になる電流値
*4:Coil operation temperature is −40℃～125℃( includes temperature when the coil is heated )
/ コイルの使用温度範囲は-40℃～125℃(コイルの発熱含む)
*5:AEC-Q200 Compliant. / AEC-Q200 準拠

## MCP0306 SERIES

| Part No. | Inductance *1 | Tolerance | TYP. DCR | Max. DCR | DC Superimposition current *2 | Temperature rise current *3 |
|---|---|---|---|---|---|---|
| 部品番号 | インダクタンス (uH) | 許容差 | 直流抵抗 (mΩ) | 最大直流抵抗 (mΩ) | 直流重畳許容電流 (A) | 温度上昇許容電流 (A) |
| MCP0306-2R2C | 2.2 | ±20% | 266 | 306 | 2.10 | 1.10 |
| MCP0306-3R3C | 3.3 | ±20% | 385 | 440 | 1.90 | 0.90 |
| MCP0306-4R7C | 4.7 | ±20% | 621 | 715 | 1.70 | 0.69 |
| MCP0306-5R6C | 5.6 | ±20% | 650 | 745 | 1.50 | 0.68 |

*1:Inductance is mesured at 100kHz. / インダクタンス測定、100kHz.
*2:DC_current based upon 20% inductance reduction from the initial value.
/ インダクタンスが初期値より-20%になる電流値
*3:DC_current based upon 40℃ temperature rise. / 温度上昇ΔT=40℃max.になる電流値
*4:Coil operation temperature is –40℃～125℃( includes temperature when the coil is heated )
/ コイルの使用温度範囲は-40℃～125℃(コイルの発熱含む)

## MCP0310 SERIES

| Part No. | Inductance *1 | Tolerance | TYP. DCR | Max. DCR | DC Superimposition current *2 | Temperature rise current *3 |
|---|---|---|---|---|---|---|
| 部品番号 | インダクタンス (uH) | 許容差 | 直流抵抗 (mΩ) | 最大直流抵抗 (mΩ) | 直流重畳許容電流 (A) | 温度上昇許容電流 (A) |
| MCP0310-1R0C | 1.0 | ±20% | 43 | 52 | 4.40 | 2.50 |
| MCP0310-2R2C | 2.2 | ±20% | 150 | 172 | 3.40 | 1.30 |
| MCP0310-3R3C | 3.3 | ±20% | 232 | 266 | 2.90 | 1.10 |
| MCP0310-4R7C | 4.7 | ±20% | 362 | 417 | 2.10 | 0.90 |
| MCP0310-6R8C | 6.8 | ±20% | 560 | 645 | 1.70 | 0.75 |
| MCP0310-100C | 10 | ±20% | 589 | 677 | 1.60 | 0.70 |

*1:Inductance is mesured at 100kHz. / インダクタンス測定、100kHz.
*2:DC_current based upon 20% inductance reduction from the initial value.
/ インダクタンスが初期値より-20%になる電流値
*3:DC_current based upon 40℃ temperature rise. / 温度上昇ΔT=40℃max.になる電流値
*4:Coil operation temperature is –40℃～125℃( includes temperature when the coil is heated )
/ コイルの使用温度範囲は-40℃～125℃(コイルの発熱含む)

# MCP0312 SERIES

| Part No. | Inductance *1 | Tolerance | TYP. DCR | Max. DCR | DC Superimposition current *2 | Temperature rise current *3 |
|---|---|---|---|---|---|---|
| 部品番号 | インダクタンス (uH) | 許容差 | 直流抵抗 (mΩ) | 最大直流抵抗 (mΩ) | 直流重畳許容電流 (A) | 温度上昇許容電流 (A) |
| MCP0312-R33C | 0.33 | ±30% | 19 | 22.8 | 11.10 | 3.40 |
| MCP0312-R47C | 0.47 | ±30% | 22 | 26.4 | 9.40 | 3.20 |
| MCP0312-R56C | 0.56 | ±30% | 29 | 34.8 | 8.50 | 3.00 |
| MCP0312-R68C | 0.68 | ±30% | 36 | 43.2 | 7.70 | 2.70 |
| MCP0312-1R0C | 1.0 | ±20% | 42.1 | 50.5 | 5.20 | 2.50 |
| MCP0312-1R2C | 1.2 | ±20% | 55 | 66.0 | 5.00 | 2.30 |
| MCP0312-1R5C | 1.5 | ±20% | 80 | 96.0 | 4.70 | 1.90 |
| MCP0312-2R2C | 2.2 | ±20% | 100 | 115.0 | 4.60 | 1.70 |
| MCP0312-3R3C | 3.3 | ±20% | 156.3 | 179.7 | 3.70 | 1.30 |
| MCP0312-4R7C | 4.7 | ±20% | 267.7 | 307.8 | 3.30 | 1.00 |
| MCP0312-5R6C | 5.6 | ±20% | 338.3 | 389.0 | 3.00 | 0.90 |
| MCP0312-6R8C | 6.8 | ±20% | 368.2 | 423.4 | 2.40 | 0.80 |

*1:Inductance is mesured at 100kHz. / インダクタンス測定、100kHz.
*2:DC_current based upon 20% inductance reduction from the initial value.
/ インダクタンスが初期値より-20%になる電流値
*3:DC_current based upon 40℃ temperature rise. / 温度上昇ΔT=40℃max.になる電流値
*4:Coil operation temperature is –40℃～125℃( includes temperature when the coil is heated )
/ コイルの使用温度範囲は-40℃～125℃(コイルの発熱含む)
*5:AEC-Q200 Compliant. / AEC-Q200 準拠

# MCP0315 SERIES

| Part No. | Inductance *1 | Tolerance | TYP. DCR | Max. DCR | DC Superimposition current *2 | Temperature rise current *3 |
|---|---|---|---|---|---|---|
| 部品番号 | インダクタンス (uH) | 許容差 | 直流抵抗 (mΩ) | 最大直流抵抗 (mΩ) | 直流重畳許容電流 (A) | 温度上昇許容電流 (A) |
| MCP0315-R47S | 0.47 | ±30% | 20 | 24 | 6.00 | 3.70 |
| MCP0315-R68S | 0.68 | ±30% | 26 | 32 | 5.00 | 3.40 |
| MCP0315-1R0S | 1.0 | ±20% | 39 | 47 | 4.40 | 2.70 |
| MCP0315-2R2S | 2.2 | ±20% | 94 | 108 | 3.00 | 1.80 |
| MCP0315-3R3S | 3.3 | ±20% | 114 | 131 | 2.90 | 1.70 |
| MCP0315-4R7S | 4.7 | ±20% | 141 | 162 | 2.70 | 1.50 |
| MCP0315-6R8S | 6.8 | ±20% | 250 | 287 | 2.30 | 1.10 |
| MCP0315-100S | 10 | ±20% | 446 | 513 | 1.60 | 0.80 |
| MCP0315-150C | 15 | ±20% | 720 | 830 | 1.71 | 0.65 |
| MCP0315-220C | 22 | ±20% | 940 | 1,040 | 1.62 | 0.59 |
| MCP0315-330C | 33 | ±20% | 1,210 | 1,330 | 1.26 | 0.52 |
| MCP0315-470C | 47 | ±20% | 2,090 | 2,300 | 1.17 | 0.39 |

*1:Inductance is mesured at 100kHz. / インダクタンス測定、100kHz.
*2:DC_current based upon 20% inductance reduction from the initial value.
/ インダクタンスが初期値より-20%になる電流値
*3:DC_current based upon 40℃ temperature rise. / 温度上昇ΔT=40℃max.になる電流値
*4:Coil operation temperature is −40℃~125℃( includes temperature when the coil is heated )
/ コイルの使用温度範囲は-40℃~125℃(コイルの発熱含む)
*5:AEC-Q200 Compliant. / AEC-Q200 準拠

# MCP0320 SERIES

| Part No. | Inductance *1 | Tolerance | TYP. DCR | Max. DCR | DC Superimposition current *2 | Temperature rise current *3 |
|---|---|---|---|---|---|---|
| 部品番号 | インダクタンス (uH) | 許容差 | 直流抵抗 (mΩ) | 最大直流抵抗 (mΩ) | 直流重畳許容電流 (A) | 温度上昇許容電流 (A) |
| MCP0320-R33S | 0.33 | ±30% | 14 | 17 | 6.80 | 5.50 |
| MCP0320-R47S | 0.47 | ±30% | 18 | 22 | 6.20 | 4.80 |
| MCP0320-R68S | 0.68 | ±30% | 22 | 27 | 5.20 | 4.50 |
| MCP0320-1R0S | 1.0 | ±20% | 26 | 32 | 4.20 | 4.00 |
| MCP0320-1R2S | 1.2 | ±20% | 30 | 36 | 4.00 | 3.90 |
| MCP0320-1R5S | 1.5 | ±20% | 33 | 39 | 3.90 | 3.70 |
| MCP0320-2R2S | 2.2 | ±20% | 67 | 80 | 3.60 | 2.40 |
| MCP0320-3R3S | 3.3 | ±20% | 99 | 114 | 3.40 | 2.20 |
| MCP0320-4R7S | 4.7 | ±20% | 137 | 158 | 3.00 | 1.90 |
| MCP0320-6R8S | 6.8 | ±20% | 168 | 193 | 2.30 | 1.60 |
| MCP0320-100S | 10 | ±20% | 280 | 322 | 2.00 | 1.20 |

*1:Inductance is mesured at 100kHz. / インダクタンス測定、100kHz.
*2:DC_current based upon 20% inductance reduction from the initial value.
/ インダクタンスが初期値より-20%になる電流値
*3:DC_current based upon 40℃ temperature rise. / 温度上昇ΔT=40℃max.になる電流値
*4:Coil operation temperature is −40℃~125℃( includes temperature when the coil is heated )
/ コイルの使用温度範囲は-40℃~125℃(コイルの発熱含む)
*5:AEC-Q200 Compliant. / AEC-Q200 準拠

## MCP0420 SERIES

| Part No. | Inductance *1 | Tolerance | TYP. DCR | Max. DCR | DC Superimposition current *2 | Temperature rise current *3 |
|---|---|---|---|---|---|---|
| 部品番号 | インダクタンス (uH) | 許容差 | 直流抵抗 (mΩ) | 最大直流抵抗 (mΩ) | 直流重畳許容電流 (A) | 温度上昇許容電流 (A) |
| MCP0420-R22S | 0.22 | ±30% | 5.5 | 7.5 | 13.10 | 9.00 |
| MCP0420-R33S | 0.33 | ±30% | 6.0 | 8.0 | 10.30 | 8.90 |
| MCP0420-R56S | 0.56 | ±30% | 7.0 | 9.0 | 9.00 | 7.90 |
| MCP0420-1R0S | 1.0 | ±20% | 13 | 16 | 7.30 | 6.70 |
| MCP0420-1R5S | 1.5 | ±20% | 17 | 21 | 6.30 | 5.40 |
| MCP0420-2R2S | 2.2 | ±20% | 29 | 35 | 5.40 | 4.20 |
| MCP0420-3R3S | 3.3 | ±20% | 40 | 48 | 4.40 | 3.30 |
| MCP0420-4R7S | 4.7 | ±20% | 63 | 76 | 4.00 | 2.90 |
| MCP0420-5R6S | 5.6 | ±20% | 68 | 81 | 3.40 | 2.80 |
| MCP0420-6R8S | 6.8 | ±20% | 97 | 116 | 3.20 | 2.30 |
| MCP0420-100S | 10 | ±20% | 161 | 193 | 2.70 | 1.80 |

*1:Inductance is mesured at 100kHz. / インダクタンス測定、100kHz.
*2:DC_current based upon 20% inductance reduction from the initial value.
/ インダクタンスが初期値より-20%になる電流値
*3:DC_current based upon 40℃ temperature rise. / 温度上昇ΔT=40℃max.になる電流値
*4:Coil operation temperature is −40℃~125℃( includes temperature when the coil is heated )
/ コイルの使用温度範囲は-40℃~125℃(コイルの発熱含む)

## MCP0430 SERIES

| Part No. | Inductance *1 | Tolerance | TYP. DCR | Max. DCR | DC Superimposition current *2 | Temperature rise current *3 |
|---|---|---|---|---|---|---|
| 部品番号 | インダクタンス (uH) | 許容差 | 直流抵抗 (mΩ) | 最大直流抵抗 (mΩ) | 直流重畳許容電流 (A) | 温度上昇許容電流 (A) |
| MCP0430-1R0S | 1.0 | ±20% | 12 | 15 | 7.40 | 7.00 |
| MCP0430-1R5S | 1.5 | ±20% | 16 | 20 | 6.60 | 5.90 |
| MCP0430-2R2S | 2.2 | ±20% | 22 | 27 | 6.00 | 5.00 |
| MCP0430-4R7S | 4.7 | ±20% | 40 | 48 | 5.10 | 3.80 |
| MCP0430-5R6S | 5.6 | ±20% | 47 | 56 | 5.00 | 3.60 |
| MCP0430-6R8S | 6.8 | ±20% | 70 | 84 | 4.40 | 2.90 |
| MCP0430-100S | 10 | ±20% | 100 | 120 | 3.50 | 2.40 |

*1:Inductance is mesured at 100kHz. / インダクタンス測定、100kHz.
*2:DC_current based upon 20% inductance reduction from the initial value.
/ インダクタンスが初期値より-20%になる電流値
*3:DC_current based upon 40℃ temperature rise. / 温度上昇ΔT=40℃max.になる電流値
*4:Coil operation temperature is −40℃~125℃( includes temperature when the coil is heated )
/ コイルの使用温度範囲は-40℃~125℃(コイルの発熱含む)

# 外形寸法図　MCPシリーズ

*Dimensions / MCP series*

## MCP1610 SERIES

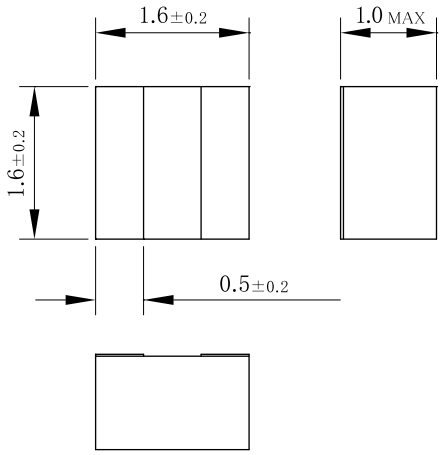


Recommended patterns
推奨ランドパターン

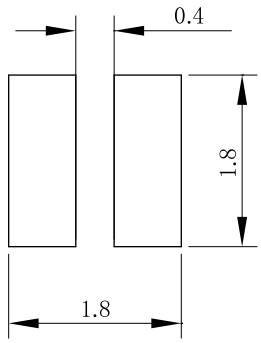


(unit:mm)

## MCP201610 SERIES

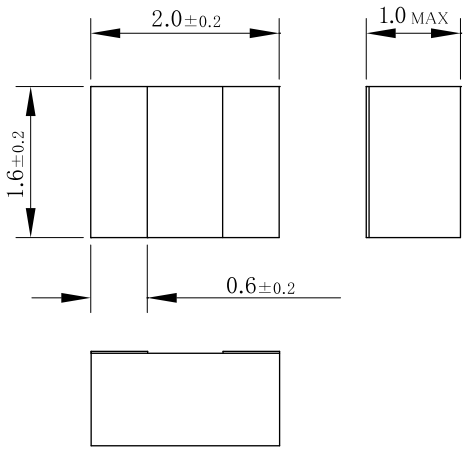


Recommended patterns
推奨ランドパターン

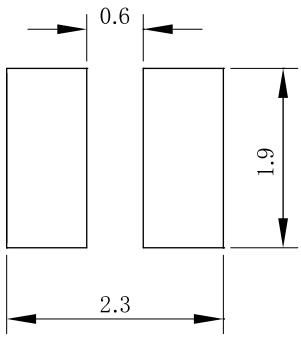


(unit:mm)

# MCP252006 / 252008 / 252010 / 252012 SERIES

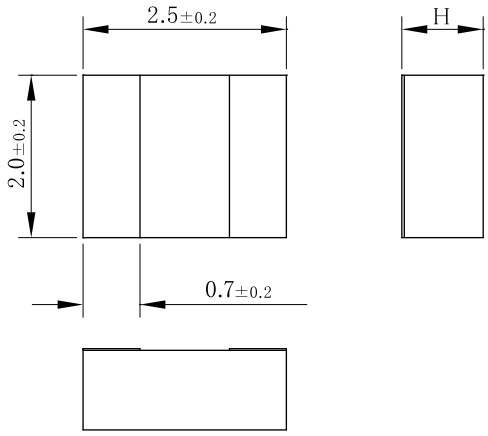


Recommended patterns
推奨ランドパターン

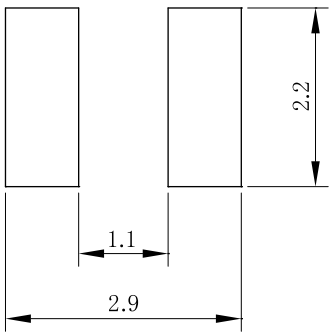


(unit:mm)

H寸法／ MCP252006:0.65MAX、MCP252008:0.8MAX、MCP252010:1.0MAX、MCP252012:1.2MAX

# MCP0306 / 0310 / 0312 / 0315 / 0320 SERIES

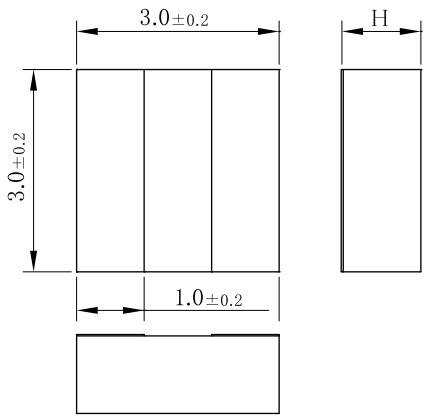


Recommended patterns
推奨ランドパターン

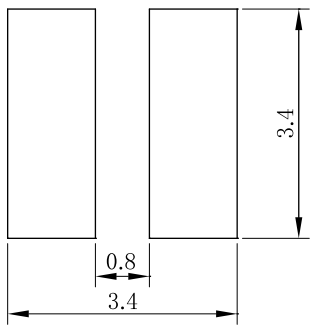


(unit:mm)

H寸法／ MCP0306:0.6MAX、MCP0310:1.0MAX、MCP0312:1.2MAX、MCP0315:1.5MAX、MCP0320:2.0MAX

# MCP0420 / 0430 SERIES

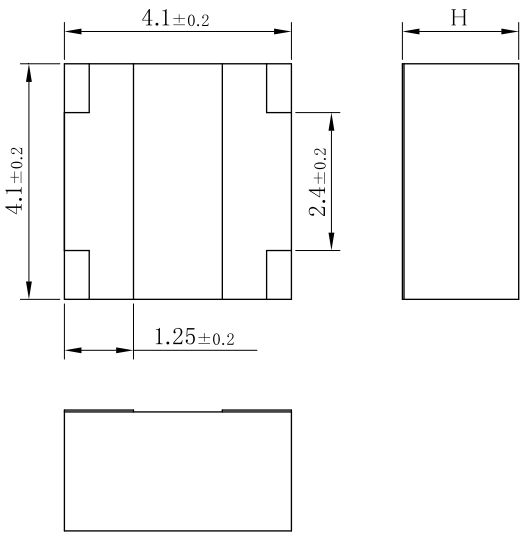


Recommended patterns
推奨ランドパターン

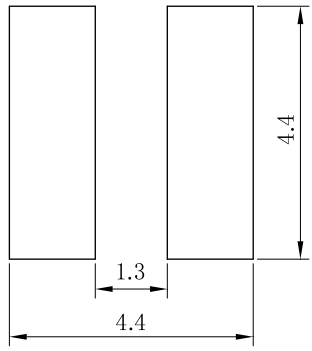


(unit:mm)

H寸法／ MCP0420:2.1MAX、MCP0430:3.1MAX

# リールパッケージ仕様

## Reel Packaging Spesification

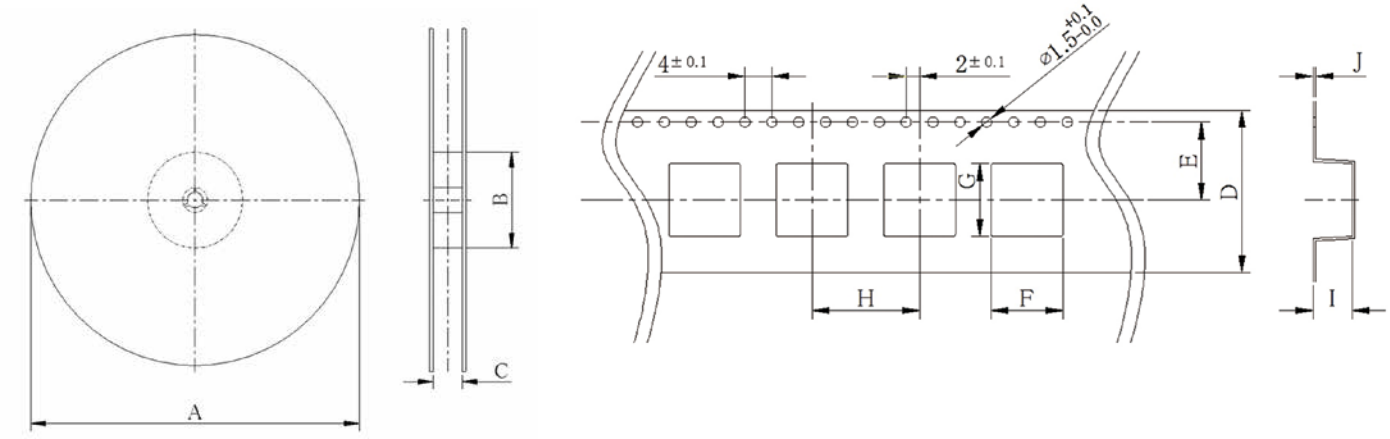


| Type<br>タイプ名 | リール寸法 ／ Rell Dimensions (mm)<br>A | B | C | テープ寸法 ／ Tape Dimensions(mm)<br>D | E | F | G | H | I | J | QTY<br>(Pcs/Reel) |
|---|---|---|---|---|---|---|---|---|---|---|---|
| SHP0315P | φ180 | φ60 | 13.0±0.5 | 12.0±0.3 | 5.5±0.1 | 3.4±0.1 | 3.4±0.1 | 8.0±0.1 | 1.7±0.1 | 0.3±0.10 | 1,000 |
| SHP0320P | φ180 | φ60 | 13.0±0.5 | 12.0±0.3 | 5.5±0.1 | 3.4±0.1 | 3.4±0.1 | 8.0±0.1 | 2.2±0.1 | 0.3±0.10 | 1,000 |
| SHP0415P | φ180 | φ60 | 13.0±0.5 | 12.0±0.3 | 5.5±0.1 | 4.4±0.1 | 4.4±0.1 | 8.0±0.1 | 1.7±0.1 | 0.3±0.10 | 1,000 |
| SHP0420P | φ180 | φ60 | 13.0±0.5 | 12.0±0.3 | 5.5±0.1 | 4.4±0.1 | 4.4±0.1 | 8.0±0.1 | 2.2±0.1 | 0.3±0.10 | 1,000 |
| SHP0520P | φ330 | φ80 | 13.5±0.5 | 12.0±0.3 | 5.5±0.1 | 5.7±0.1 | 5.6±0.1 | 8.0±0.1 | 2.4±0.1 | 0.4±0.05 | 2,000 |
| SHP0530P | φ330 | φ80 | 13.5±0.5 | 12.0±0.3 | 5.5±0.1 | 5.7±0.1 | 5.6±0.1 | 8.0±0.1 | 3.2±0.1 | 0.4±0.05 | 2,000 |
| SHP0735P | φ380 | φ80 | 25.5±0.5 | 24.0±0.3 | 11.5±0.1 | 8.1±0.1 | 8.1±0.1 | 16.0±0.1 | 3.8±0.1 | 0.4±0.05 | 1,000 |
| SHP0745P | φ380 | φ80 | 25.5±0.5 | 24.0±0.3 | 11.5±0.1 | 8.1±0.1 | 8.1±0.1 | 16.0±0.1 | 4.8±0.1 | 0.4±0.05 | 1,000 |
| SHP0760P | φ380 | φ80 | 25.5±0.5 | 24.0±0.3 | 11.5±0.1 | 8.1±0.1 | 8.1±0.1 | 16.0±0.1 | 6.5±0.1 | 0.4±0.05 | 800 |
| SHP1035P | φ380 | φ80 | 25.5±0.5 | 24.0±0.3 | 11.5±0.1 | 10.7±0.1 | 10.7±0.1 | 16.0±0.1 | 3.8±0.1 | 0.4±0.05 | 1,000 |
| SHP1045P | φ380 | φ80 | 25.5±0.5 | 24.0±0.3 | 11.5±0.1 | 10.7±0.1 | 10.7±0.1 | 16.0±0.1 | 4.8±0.1 | 0.4±0.05 | 1,000 |
| SHP1055P | φ380 | φ80 | 25.5±0.5 | 24.0±0.3 | 11.5±0.1 | 10.7±0.1 | 10.7±0.1 | 16.0±0.1 | 5.8±0.1 | 0.4±0.05 | 800 |
| SHP1235P | φ380 | φ80 | 25.5±0.5 | 24.0±0.3 | 11.5±0.1 | 13.1±0.1 | 13.1±0.1 | 16.0±0.1 | 3.8±0.1 | 0.4±0.05 | 700 |
| SHP1245P | φ380 | φ80 | 25.5±0.5 | 24.0±0.3 | 11.5±0.1 | 13.1±0.1 | 13.1±0.1 | 16.0±0.1 | 4.8±0.1 | 0.4±0.05 | 700 |
| SHP1260P | φ380 | φ80 | 25.5±0.5 | 24.0±0.3 | 11.5±0.1 | 13.1±0.1 | 13.1±0.1 | 16.0±0.1 | 6.1±0.1 | 0.4±0.05 | 700 |
| SHP1280P | φ380 | φ80 | 25.5±0.5 | 24.0±0.3 | 11.5±0.1 | 13.1±0.1 | 13.1±0.1 | 16.0±0.1 | 8.2±0.1 | 0.4±0.05 | 500 |

| Type | リール寸法 ／ Rell Dimensions (mm) | | | テープ寸法 ／ Tape Dimensions(mm) | | | | | | | QTY |
|---|---|---|---|---|---|---|---|---|---|---|---|
| タイプ名 | A | B | C | D | E | F | G | H | I | J | (Pcs/Reel) |
| MCP1610 | φ180 | φ60 | 9.0±0.5 | 8.0±0.2 | 3.5±0.1 | 2.05±0.1 | 2.07±0.1 | 4.0±0.1 | 1.10±0.1 | 0.22±0.05 | 3,000 |
| MCP201610 | φ180 | φ60 | 9.0±0.5 | 8.0±0.2 | 3.5±0.1 | 1.9±0.1 | 2.15±0.1 | 4.0±0.1 | 1.15±0.1 | 0.22±0.05 | 3,000 |
| MCP252006 | φ180 | φ60 | 9.0±0.5 | 8.0±0.2 | 3.5±0.1 | 2.3±0.1 | 2.75±0.1 | 4.0±0.1 | 1.17±0.1 | 0.22±0.05 | 3,000 |
| MCP252008 | φ180 | φ60 | 9.0±0.5 | 8.0±0.2 | 3.5±0.1 | 2.3±0.1 | 2.75±0.1 | 4.0±0.1 | 1.17±0.1 | 0.22±0.05 | 3,000 |
| MCP252010 | φ180 | φ60 | 9.0±0.5 | 8.0±0.2 | 3.5±0.1 | 2.3±0.1 | 2.75±0.1 | 4.0±0.1 | 1.3±0.1 | 0.22±0.05 | 3,000 |
| MCP252012 | φ180 | φ60 | 9.0±0.5 | 8.0±0.2 | 3.5±0.1 | 2.3±0.1 | 2.75±0.1 | 4.0±0.1 | 1.3±0.1 | 0.22±0.05 | 3,000 |
| MCP0306 | φ180 | φ60 | 13.0±0.5 | 12.0±0.3 | 5.5±0.1 | 3.68±0.1 | 3.68±0.1 | 8.0±0.1 | 1.5±0.1 | 0.3±0.10 | 1,000 |
| MCP0310 | φ180 | φ60 | 13.0±0.5 | 12.0±0.3 | 5.5±0.1 | 3.68±0.1 | 3.68±0.1 | 8.0±0.1 | 1.5±0.1 | 0.3±0.10 | 1,000 |
| MCP0312 | φ180 | φ60 | 13.0±0.5 | 12.0±0.3 | 5.5±0.1 | 3.68±0.1 | 3.68±0.1 | 8.0±0.1 | 1.5±0.1 | 0.3±0.10 | 1,000 |
| MCP0315 | φ180 | φ60 | 13.0±0.5 | 12.0±0.3 | 5.5±0.1 | 3.68±0.1 | 3.68±0.1 | 8.0±0.1 | 1.5±0.1 | 0.3±0.10 | 1,000 |
| MCP0320 | φ180 | φ60 | 13.0±0.5 | 12.0±0.3 | 5.5±0.1 | 3.68±0.1 | 3.68±0.1 | 8.0±0.1 | 2.3±0.1 | 0.3±0.10 | 1,000 |
| MCP0420 | φ180 | φ60 | 13.0±0.5 | 12.0±0.3 | 5.5±0.1 | 4.60±0.1 | 4.60±0.1 | 8.0±0.1 | 2.3±0.1 | 0.3±0.10 | 1,000 |
| MCP0430 | φ180 | φ60 | 13.0±0.5 | 12.0±0.3 | 5.5±0.1 | 4.60±0.1 | 4.60±0.1 | 8.0±0.1 | 3.3±0.1 | 0.3±0.10 | 700 |

# 東京コイルエンジニアリング株式会社

http://www.tokyocoil.com

本　社
〒192-0045 東京都八王子市大和田町 2-7-5　TEL 042-656-6262 ／ FAX 042-656-6336

名古屋営業所
〒450-0003 愛知県名古屋市中村区名駅南 1-18-11 コアビル 3F　TEL 052-414-6803 ／ FAX 052-414-6804

【関連会社】

| | | |
|---|---|---|
| 東京コイル香港線圏有限公司 | TEL +86-755-8209-0302 | ／ FAX +86-755-8209-0663 |
| TW（Thailand）Co.,LTD. | TEL +66-53-581241 | ／ FAX +66-53-581240 |
| Tokyo Coil Engineer（Thailand）Co.,Ltd. | TEL +66-53-581241 | ／ FAX +66-53-581240 |
| Tokyo Coil Engineering（Lao）Co.,Ltd. | TEL +856-21-812178 | ／ FAX +856-21-812177 |
| SST Incorporated | TEL +82-31-424-0021 | ／ FAX +82-31-424-0268 |


2018/9 Rev.8 : 改定履歴